High and Low Frequency Radio Frequency Identification Systems (RFID)

CONTRINEX

HIGHLIGHTS

- High and low frequency systems net-workable on ContriNet

Low-frequency system

- All-metal housings, IP 68 and IP 69K
- Food safe and saltwater resistant (316L/V4A)
- VHT tags for very high temperatures, up to 180°C (356°F)
- All tags embeddable in metal

High-frequency system

- ISO/IEC 15693 compatible
- VHT tags for very high temperatures, embeddable in metal
- UHT tags for ultra high temperatures, up to 250°C (482°F)

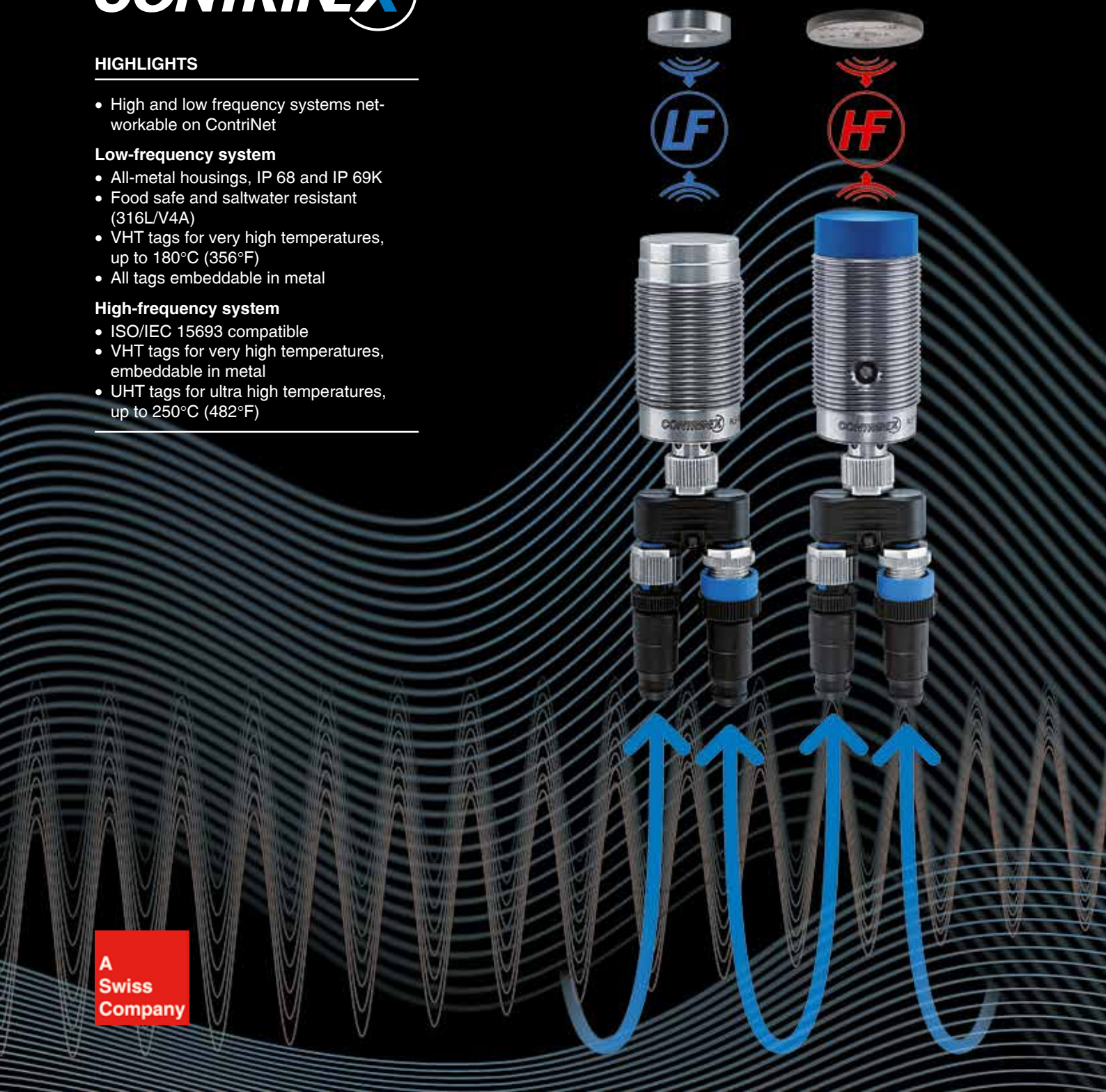

A Swiss Company

INTRODUCTION

AT A GLANCE

- ✓ Technology leading manufacturer of inductive and photoelectric sensors as well as Safety and RFID systems
- ✓ World market leader for miniature sensors, sensors with long operating distance and devices for particularly demanding operating conditions
- ✓ Represented in over 60 countries worldwide, headquarters in Switzerland
- ✓ 14 own subsidiaries in all major markets
- ✓ More than 500 employees worldwide

Contrinex Headquarters, Switzerland

RFID SYSTEMS

RFID (Radio Frequency IDentification) is used in numerous automation and logistics domains. It allows objects to be identified by means of electronic labels (transponders or tags).

Compared to classic systems, such as bar codes or laser marking, RFID technology offers important advantages. Transponder information can be read or written even when there is no direct line of vision between it and the Read/Write Module. In addition, information can be added, modified or replaced. It is a useful technology for automated production, reducing human error while increasing reliability, flexibility and traceability.

ConIdent® is the general name of the Contrinex RFID system, including transponders, Read/Write Modules and interfaces in both low frequency (LF) and high frequency (HF) technology.

ContriNet is the name of the Contrinex RFID network. This network is particularly user friendly since it allows the connection of LF and/or HF Read/Write Modules in the same network, reducing the number of interfaces. **ContriNet** is an RS485 network with a specific Contrinex protocol.

An RFID system always has the structure illustrated on page 3.

LOW FREQUENCY (LF) RFID (31.25 kHz)

Contrinex LF RFID technology features not only conventional components, but also a range of all-metal Read/Write Modules and transponders in stainless steel. These devices are particularly suitable for difficult operating environments where they will be exposed to cleaning, harsh chemicals, water and frost. They are highly resistant to mechanical shocks.

- Reads and writes through metal
- Works in a metallic environment
- Works in harsh environments
- Non-standard technology
- Very high temperature tags (VHT 180°C / 356°F) embeddable in metal

HIGH FREQUENCY (HF) RFID (13.56 MHz)

Contrinex HF RFID technology complies with ISO/IEC 15693 and is therefore open to any components that meet this standard. HF systems allow fast communication between transponders and Read/Write Modules as well as extended functionality for tag data protection.

- ISO/IEC 15693
- Ultra high temperature tags (UHT 250°C / 482°F)
- Very high temperature tags (VHT 180°C / 356°F) embeddable in metal

RFID COMPONENTS

- **Transponders (or tags):** A transponder is an electronic label that stores data. Transponder memory includes a unique preset number as an identifier and a writeable zone specific to the object. Writeable data may include, for example, the object's history or the parameters of operations to which it will be subjected.
- **Read/Write Modules (RWMs):** A Read/Write Module is a device that allows data to be written to or read from a transponder.
- **Interface:** The interface connects the Read/Write Modules to an industrial fieldbus.

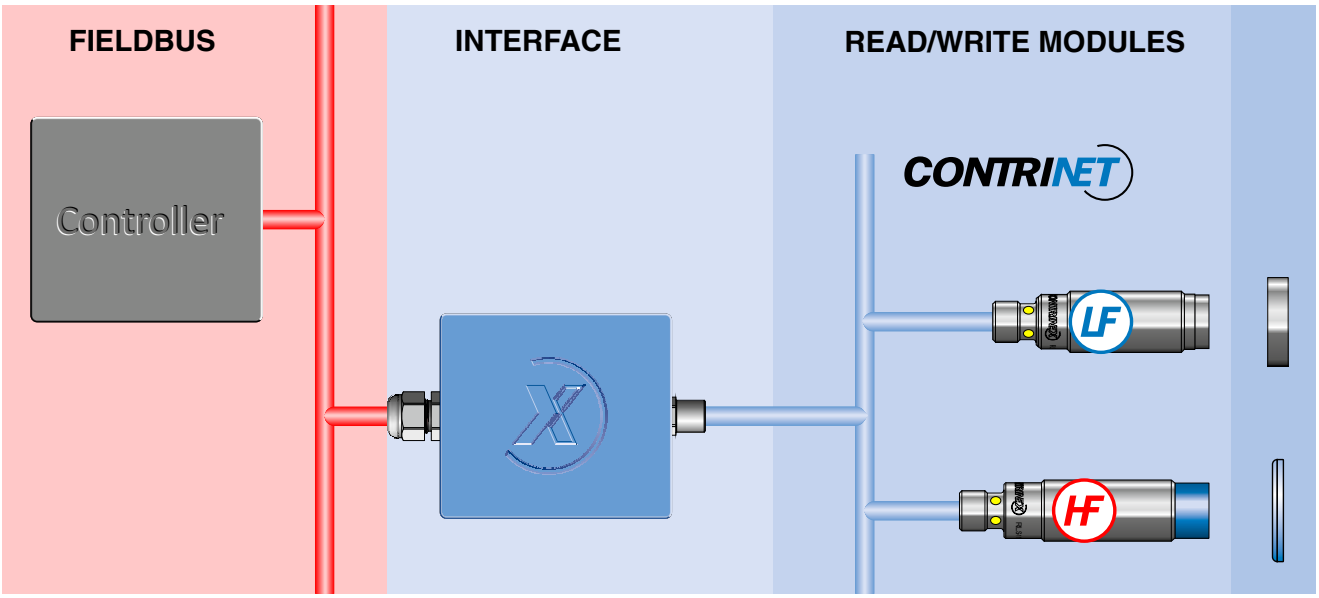

Communication between the RWM and any tags is provided by the modulation of a carrier. The frequency indicated for any RFID system is the frequency of its carrier.

APPLICATIONS

WASHING STATIONS

In the harsh environment of a washing station, RFID transponders and Read/Write Modules are exposed to hot water, mechanical shocks, corrosive chemicals and high-pressure jetting. Despite these challenges, identification systems must operate continuously with high reliability.

Typically, RFID tags are mounted on the part carriers. On arrival at the washing station, information from the tag is used to select the correct washing cycle for the part type and process.

ConIdent® advantages

ConID passive tags require no power source and minimal maintenance. Rugged, low frequency tags with all-metal housings are sealed to IP 67 or IP 69K to resist water penetration and can withstand temperatures up to 180°C (+356°F). Their extended sensing range reduces the risk of mechanical damage. Read/write units interface directly with customer control systems.

MACHINE TOOLS

The presence under pressure of lubricating and cooling fluids, combined with metal particles, makes the machine tool environment particularly difficult. Identification components must resist fluid penetration to prevent downtime and ensure the reliability of data.

An industrial network of Read/Write Modules, interfaces and tags forms a complete RFID system to control the path of each workpiece through all machining cycles, programming and logging every step.

ConIdent® advantages

All-metal, low-frequency tags and Read/Write Modules are resistant to corrosion, impact and abrasion. For use in the harshest environments, laser welded tags are fully sealed and can be embedded in metal. They function reliably in water, withstand high pressure cleaning and resist aggressive solvents. Tags are optimized for operating temperatures from -40 to +180°C (-40 to +356°F) and have a protection rating of IP 68 and IP 69K. Read/Write Modules are not influenced by the presence of metal particles.

TESTING LINES

Product testing lines may comprise several test stations, each performing a fixed sequence of tests. For efficient diagnosis, identification systems must integrate well into the overall control system.

In a typical RFID system, part carriers are equipped with tags and every test station has a Read/Write Module (RWM). To program the testing machine, the RWM reads from each tag the type of test required for an individual part. After each test, the RWM writes the results back into the appropriate tag memory. Test reports are automatically forwarded to the controller for product acceptance or rejection and fault correction.

ConIdent® advantages

The Contrinex HF RFID system includes numerous interfaces for integration into control systems. The structure is extremely simple, with just one master for all Read/Write Modules. Direct connection to an RS485 bus is possible. ConID HF software allows RFID components to be tested using an ordinary PC. System stability and EMC characteristics are very good.

PAINT SHOPS

Identification components in paint shops are exposed to a variety of rinsing, coating and burning operations, including electrophoresis. Since soiling makes visual identification difficult or impossible, rugged RFID systems are an excellent solution.

The RFID tag accompanies each product throughout all processes. It can store individual data, including customer requirements, directly on the product or carrier. This allows for highly automated, customized processes with smaller batches and central data storage.

ConIdent® advantages

The high-frequency system includes specially adapted, high-temperature tags with IP68/IP69K protection. Their silicone-free composition makes them ideal for paint-shop applications. They are resistant to various detergents and can be read/written directly on leaving the high temperature zone (cooling not required):

- Tag RTP-0263-020, for embedded or non-embedded mounting in metal; Ø 26 mm (1.02”), temperature resistant up to 180°C (356°F)
- Tag RTP-0502-022, non-embeddable; Ø 50 mm (1.97”), temperature resistant up to 250°C (482°F).

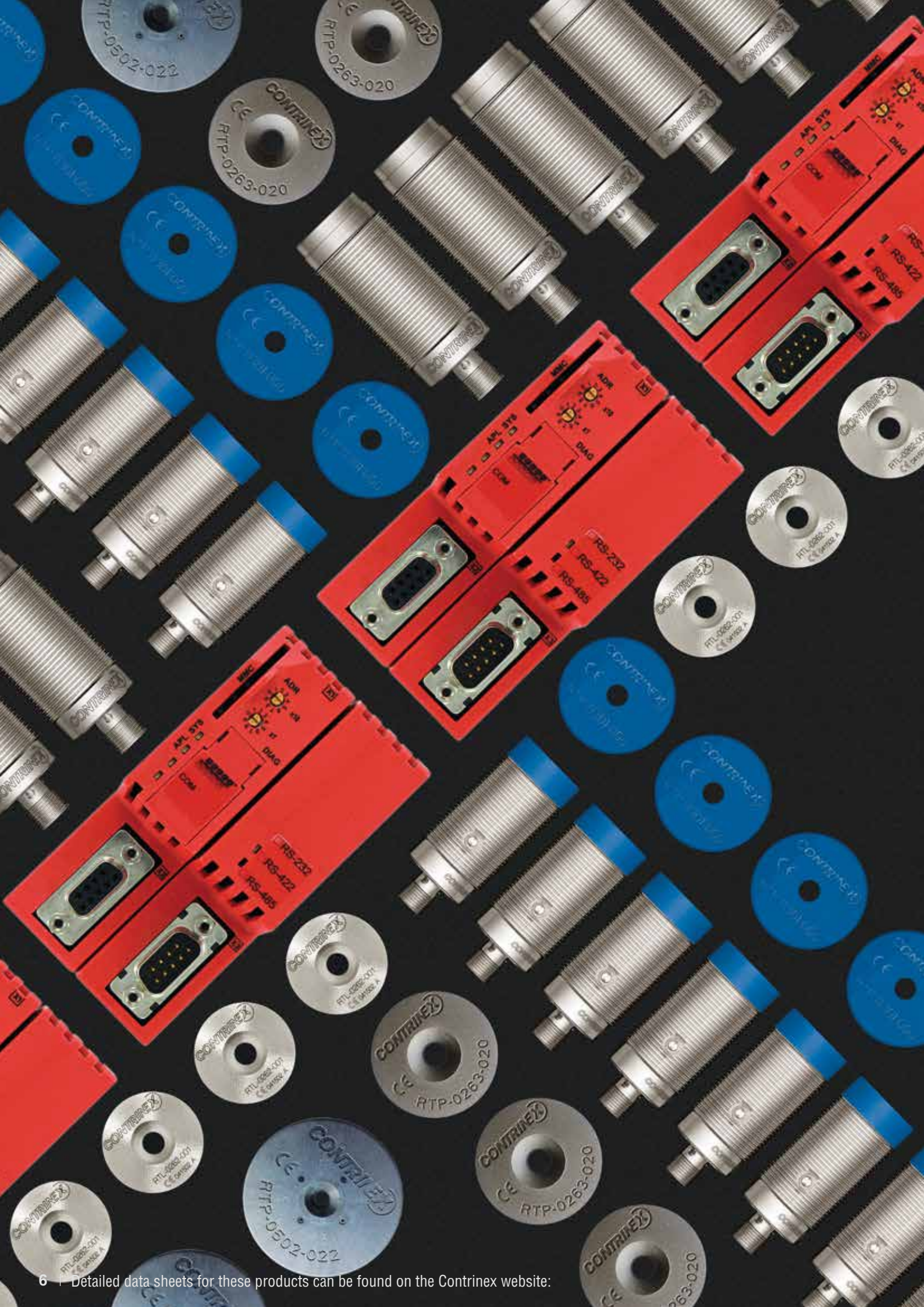
RTP-0502-022
RTP-0263-020
RTP-0263-020
RS-232
RS-422
RS-485
RS-232
RS-422
RS-485
RTP-0263-020
RTP-0263-020
RTP-0502-022

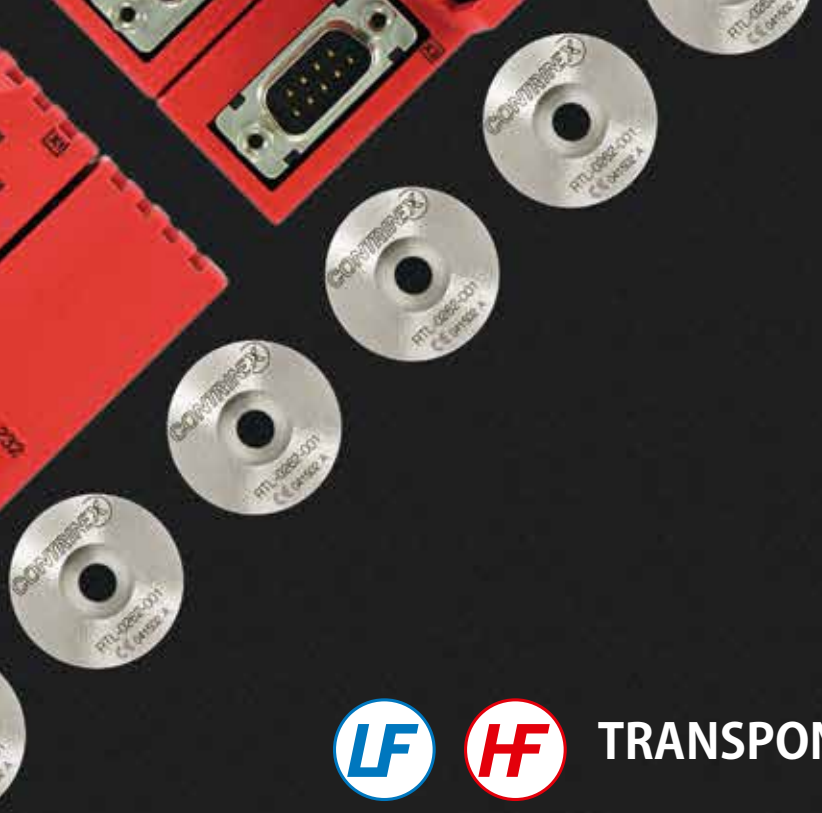

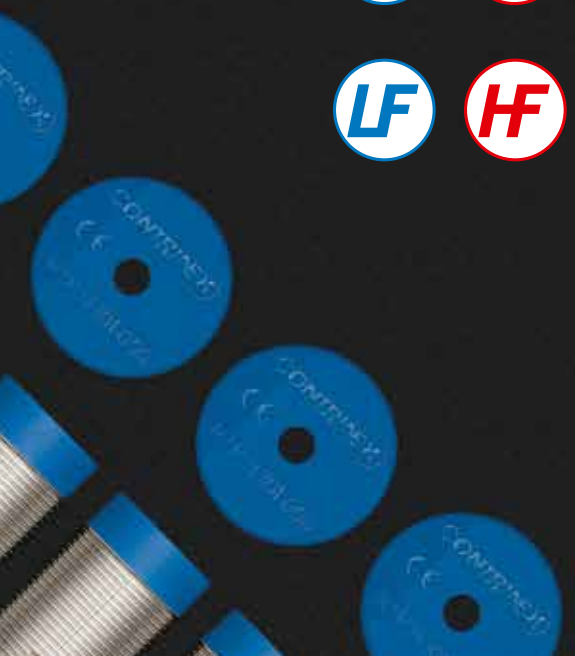

PROGRAM OVERVIEW

TRANSPONDER OVERVIEW

LOW FREQUENCY TRANSPONDERS (PASSIVE)

TRANSPONDER	Mounting	Material	Characteristics	Page
RTM / RTF Ø 10 - Ø 26 M16 - M30	Embeddable or non-embeddable	Stainless steel V2A	-40 ... +80°C (-40 to +176°F)	14-15
RTL Ø 10 - Ø 26 M16 - M30	Embeddable	Stainless steel V4A	-40 ... +125°C or +180°C (-40 ... +257°F or +356°F) IP 68 & IP 69K Food safe Corrosion resistant	16-17
RTP Ø 20 - Ø 50	Embeddable	PBTP glass-fiber reinforced	-40 ... +125°C (-40 to +257°F) IP 68 & IP 69K Food safe Corrosion resistant Insensitive to soiling	13

HIGH FREQUENCY TRANSPONDERS (PASSIVE)

TRANSPONDER	Mounting	Material	Characteristics	Page
RTP Ø 20 - Ø 50	Non-embeddable	PBTP glass-fiber reinforced	-25 ... +85°C (-13 to +185°F) IP 67 Compatible with ISO/IEC 15693 Insensitive to soiling	19
RTP Ø 9	Non-embeddable	PPS and epoxy	-25 ... +85°C (-13 to +185°F) IP 67 Compatible with ISO/IEC 15693 Insensitive to soiling	20
RTP Ø 50	Non-embeddable	LCP	-25 ... +250°C (-13 to +482°F) IP 68 & IP 69K Compatible with ISO/IEC 15693 Insensitive to soiling	21
RTP Ø 26	Embeddable mounting in metal	PPS	-25 ... +180°C (-13 to +356°F) IP 68 & IP 69K Compatible with ISO/IEC 15693 Insensitive to soiling	20


CONTRINEX
RTP-0502-022
RTL-0062-001
RTM-2300-000

TRANSPONDERS

LF LOW FREQUENCY

HF HIGH FREQUENCY

KEY ADVANTAGES

✓ Passive (no battery)
✓ LF and HF can be used in same application

LF

✓ Stainless steel tags (transponders) for harsh environments
✓ Insensitive to soiling
✓ Food safe and saltwater resistant tags, IP 69K
✓ Tags readable/writeable through metal

HF

✓ Compatible with ISO/IEC 15693
✓ Insensitive to soiling
✓ Tags for temperatures up to 250°C (482°F)
✓ PPS tags that can be embedded in metal, IP 69K

STRUCTURE OF MEMORY

PLASTIC

HOUSING SIZE	
MAX. READ/WRITE DISTANCE MM	

TECHNICAL DATA

Compatible IC type	EM4056
Read/write memory	240 byte
Read only memory	12 byte

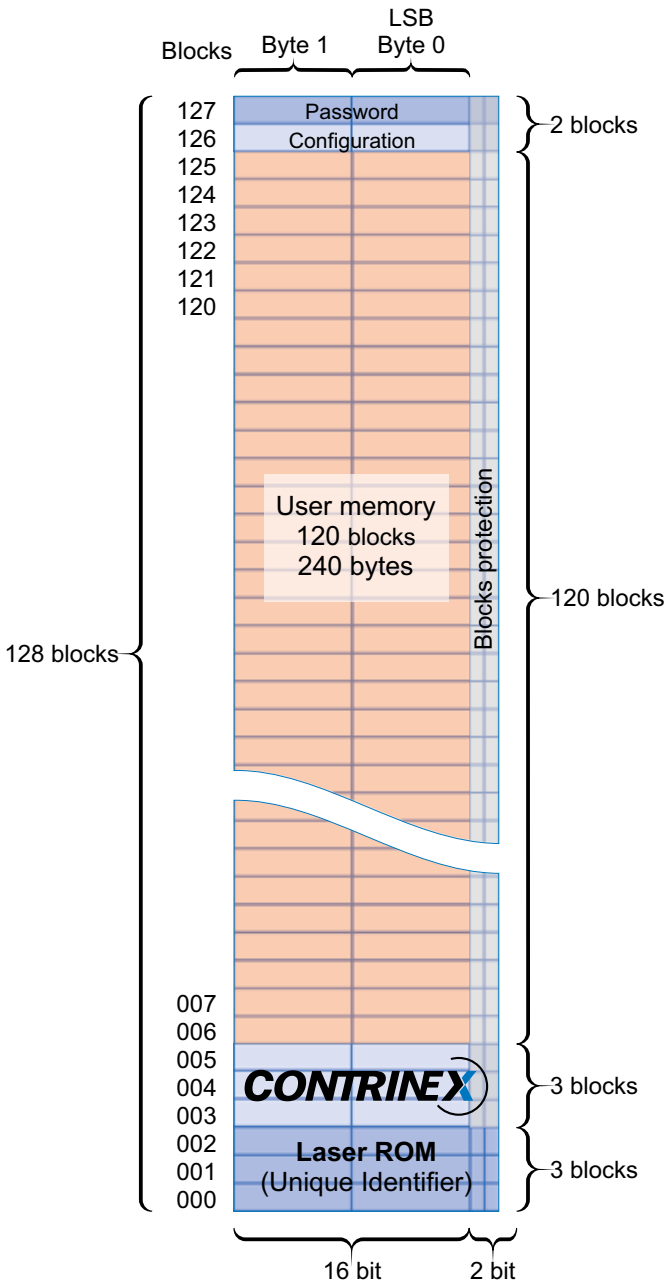

Various tag memory protection possibilities are provided, including password protection and OTP write protection of data blocks.

DATA

Housing material	
Mounting	
Ambient temperature range	
Weight	
Part reference	

TRANSPONDERS

Ø 20	Ø 30	Ø 50
28	29	41

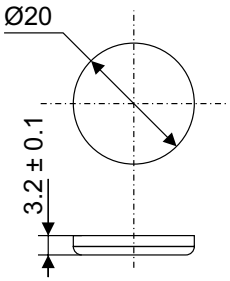

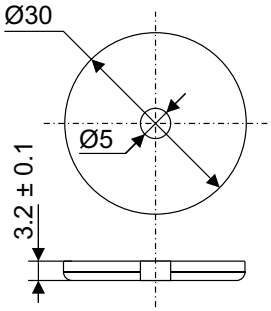

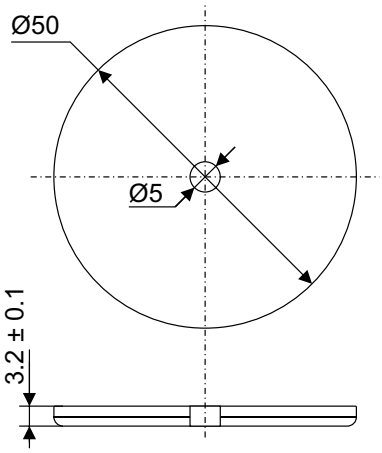

PBTP glass-fiber reinforced	PBTP glass-fiber reinforced	PBTP glass-fiber reinforced
Embeddable	Embeddable	Embeddable
-40 ... +125°C / -40 … +257°F	-40 ... +125°C / -40 … +257°F	-40 ... +125°C / -40 … +257°F
1.3 g	2.3 g	5.7 g
RTP-0201-000	RTP-0301-000	RTP-0501-000

LOW FREQUENCY

STAINLESS STEEL V2A

HOUSING SIZE MM	Ø 10	Ø 16	Ø 26
MAX. READ/WRITE DISTANCE MM	17	19	27

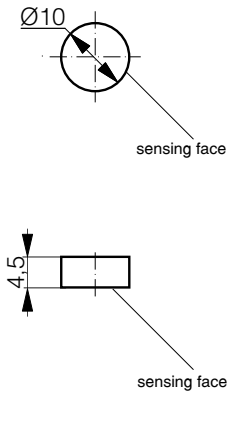

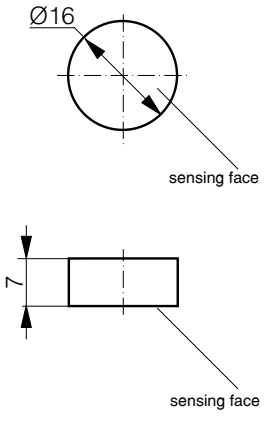

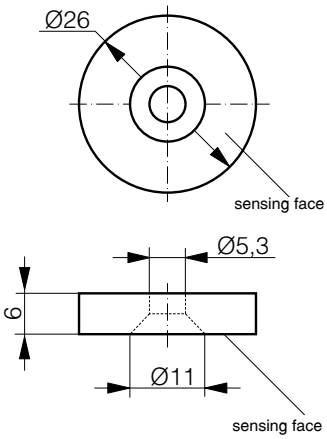

DATA			
Housing material	Stainless steel V2A	Stainless steel V2A	Stainless steel V2A
Mounting	Embeddable	Embeddable	Embeddable
Ambient temperature range	-40 ... +80°C / -40 … +176°F	-40 ... +80°C / -40 … +176°F	-40 ... +80°C / -40 … +176°F
Weight	1.1 g	2.7 g	7.0 g
Part reference	RTM-0100-000	RTM-0160-000	RTM-0260-000

TRANSPONDERS

M16	M30	M30
13	18	23

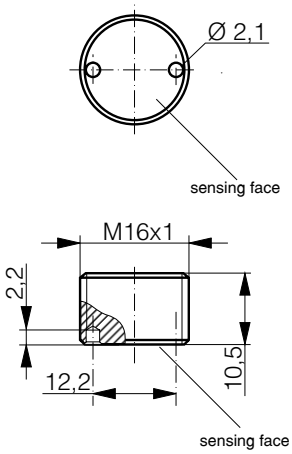

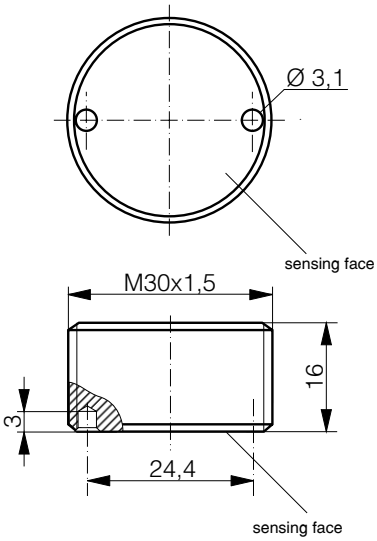

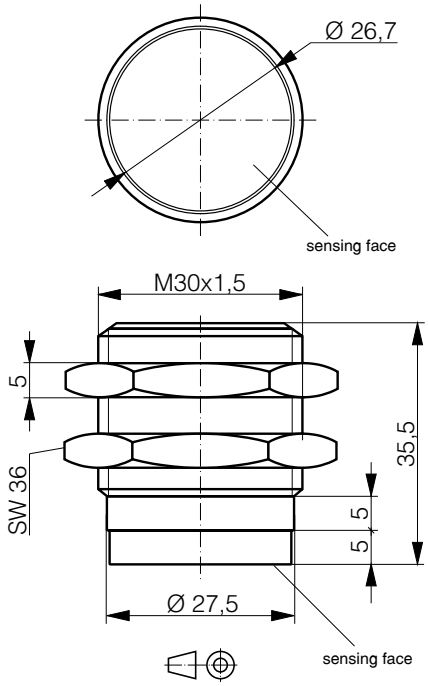

Stainless steel V2A	Stainless steel V2A	Stainless steel V2A
Embeddable	Embeddable	Non-embeddable
-40 ... +80°C / -40 … +176°F	-40 ... +80°C / -40 … +176°F	-40 ... +80°C / -40 … +176°F
6.9 g	31.4 g	98.7 g
RTM-2160-000	RTM-2300-000	RTF-1300-000

LOW FREQUENCY

STAINLESS STEEL V4A, LASER WELDED

HOUSING SIZE MM	Ø 10	Ø 16	Ø 26
MAX. READ/WRITE DISTANCE MM	17	19	27

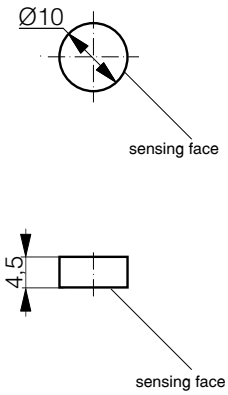

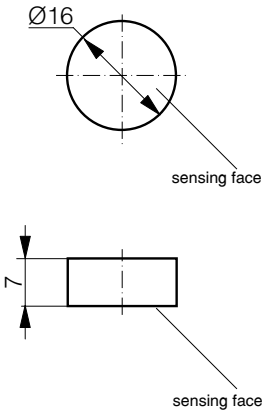

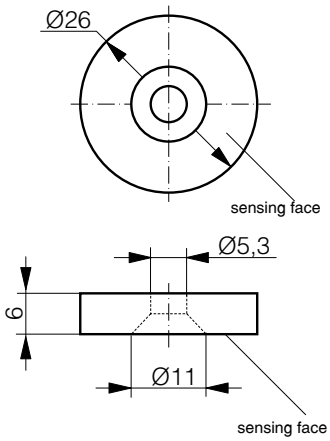

DATA			
Housing material	Stainless steel V4A	Stainless steel V4A	Stainless steel V4A
Mounting	Embeddable	Embeddable	Embeddable
Ambient temperature range	-40 ... +125°C / -40 … +257°F	-40 ... +125°C / -40 … +257°F	-40 ... +125°C / -40 … +257°F
Weight	1.5 g	3.3 g	12.5 g
Part reference	RTL-0102-001	RTL-0162-001	RTL-0262-001

TRANSPONDERS

Ø 26	M16	M30	M30
27	13	18	23

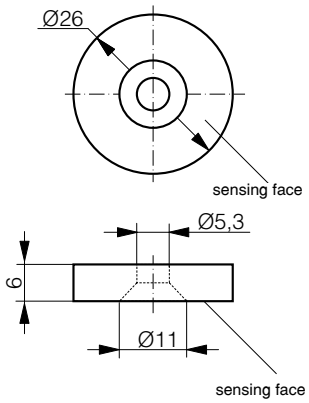

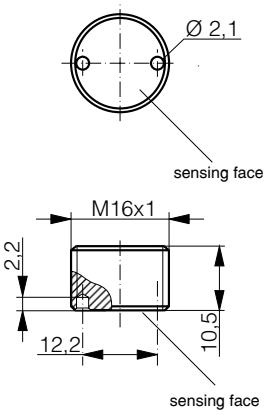

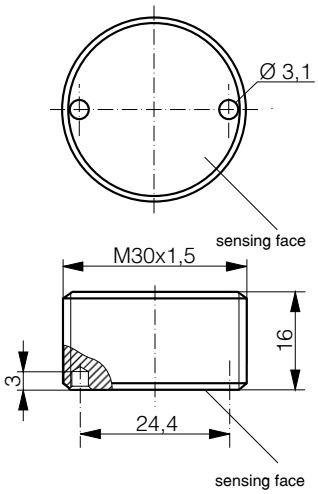

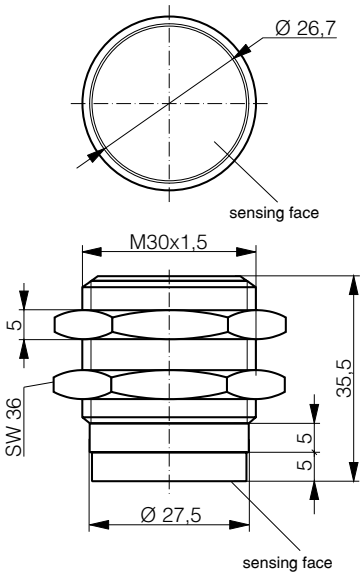

Stainless steel V4A	Stainless steel V4A	Stainless steel V4A	Stainless steel V4A
Embeddable	Embeddable	Embeddable	Non-embeddable
-40 ... +180°C / -40 … +356°F	-40 ... +125°C / -40 … +257°F	-40 ... +125°C / -40 … +257°F	-40 ... +125°C / -40 … +257°F
12.5 g	7.9 g	33.1 g	44.1 g
RTL-0262-003	RTL-2162-001	RTL-2302-001	RTL-1302-001

STRUCTURE OF MEMORY

PLASTIC

HOUSING SIZE MM	
MAX. READ/WRITE DISTANCE MM	

TECHNICAL DATA

Compatible IC type	SL2 ICS53 I·Code SLI-S
Read/write memory	160 byte
Read only memory	96 byte
Standard	ISO/IEC 15693

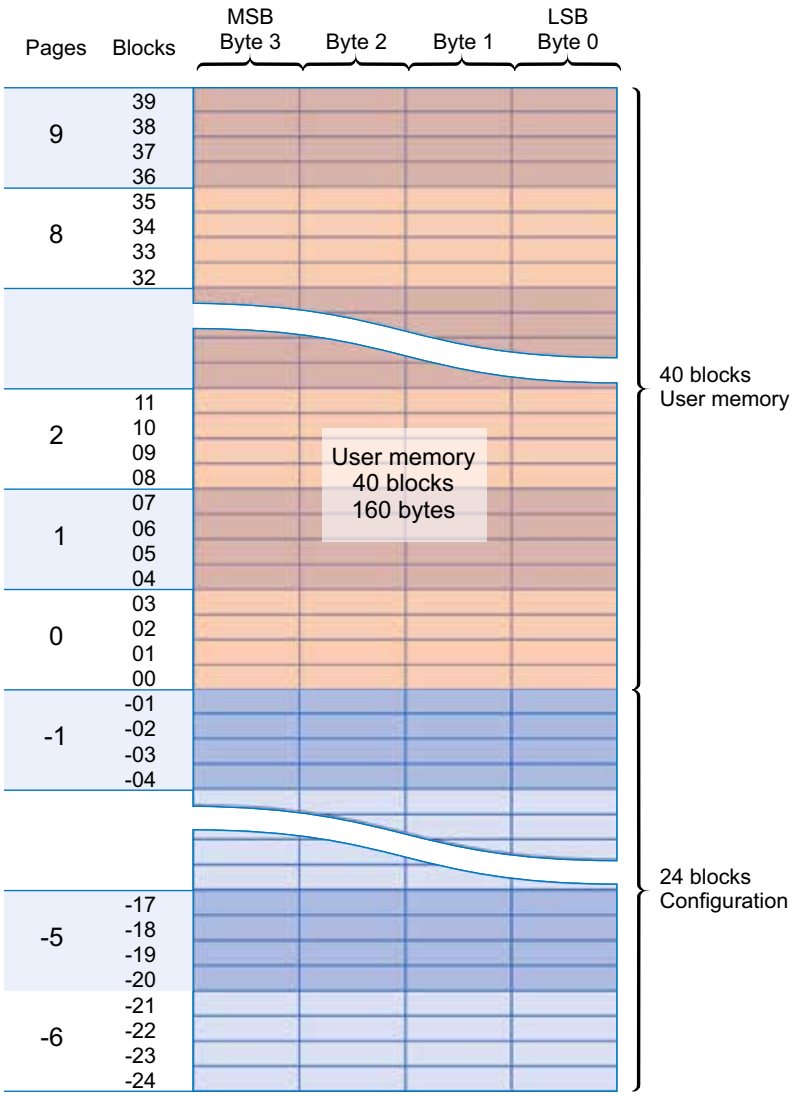

Various tag memory protection possibilities are provided, including password protection and OTP write protection of data blocks.

DATA

Housing material	
Mounting	
Ambient temperature range	
Weight	
Part reference	

TRANSPONDERS

Ø 20	Ø 30	Ø 50
26	36	47

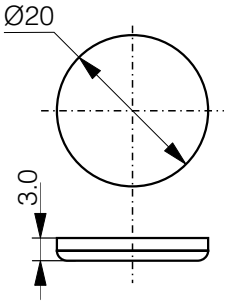

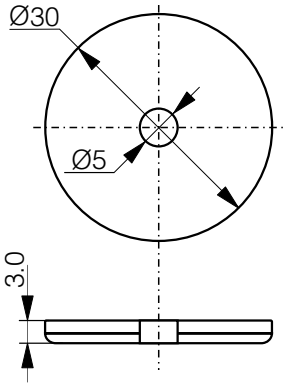

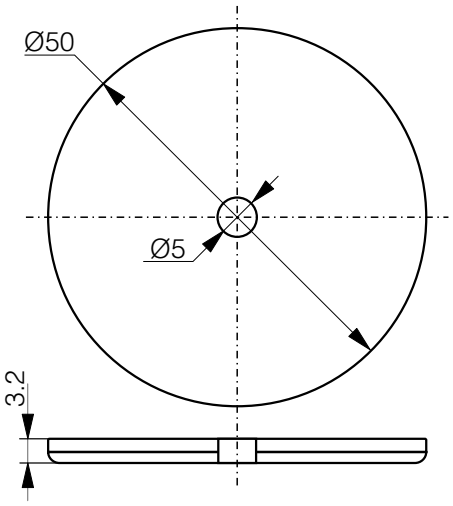

PBTP glass-fiber reinforced	PBTP glass-fiber reinforced	PBTP glass-fiber reinforced
Non-embeddable	Non-embeddable	Non-embeddable
-25 ... +85°C / -13 … +185°F	-25 ... +85°C / -13 … +185°F	-25 ... +85°C / -13 … +185°F
1.3 g	2.7 g	6.6 g
RTP-0201-020	RTP-0301-020	RTP-0501-020

HIGH FREQUENCY

	PLASTIC	PLASTIC EMBEDDABLE IN METAL
HOUSING SIZE	Ø 9	Ø 26
MAX. READ/WRITE DISTANCE MM	16	34

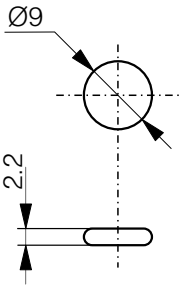

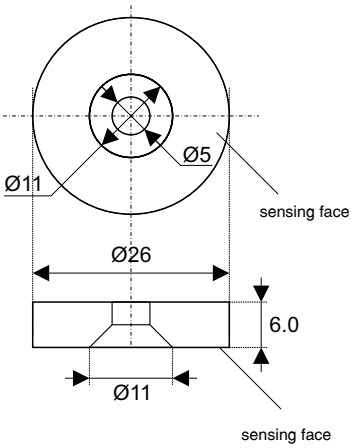

DATA		
Housing material	PPS + Epoxy	PPS, silicone free
Mounting	Non-embeddable	Embeddable
Ambient temperature range	-40 ... +85°C / -40 … +185°F	-25 ... +180°C / -13 … +356°F
Weight	0.25 g	3.3 g
Part reference	RTP-0090-020	RTP-0263-020

PLASTIC ULTRA HIGH TEMPERATURE

Ø 50

60

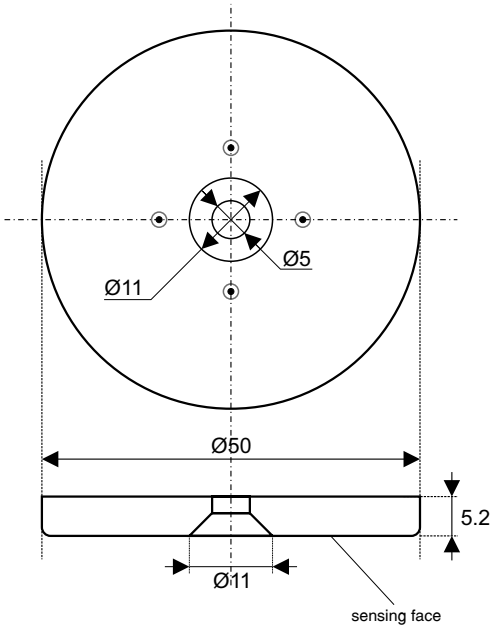

LCP (Liquid Crystal Polymer), silicone free
Non-embeddable
-25 ... +250°C / -13 … +482°F
16.9 g
RTP-0502-022


HF
LF
HF
LF
LF
LF
CONTRINEX

CONTRINET

LF LOW FREQUENCY

HF HIGH FREQUENCY

KEY ADVANTAGES

- ✓ Powerful RS485 network for LF and HF systems
- ✓ Threaded Read/Write Modules (RWMs) with S12 connector and RS485 output
- ✓ LF and HF RWMs can be mixed on the same network
- ✓ Rugged all-metal RWMs with impervious sensing face
- ✓ High-temperature RWMs for up to +125°C (257°F)
- ✓ Interfaces for most industrial fieldbuses and USB

CONTRINET: THE CONTRINEX NETWORK

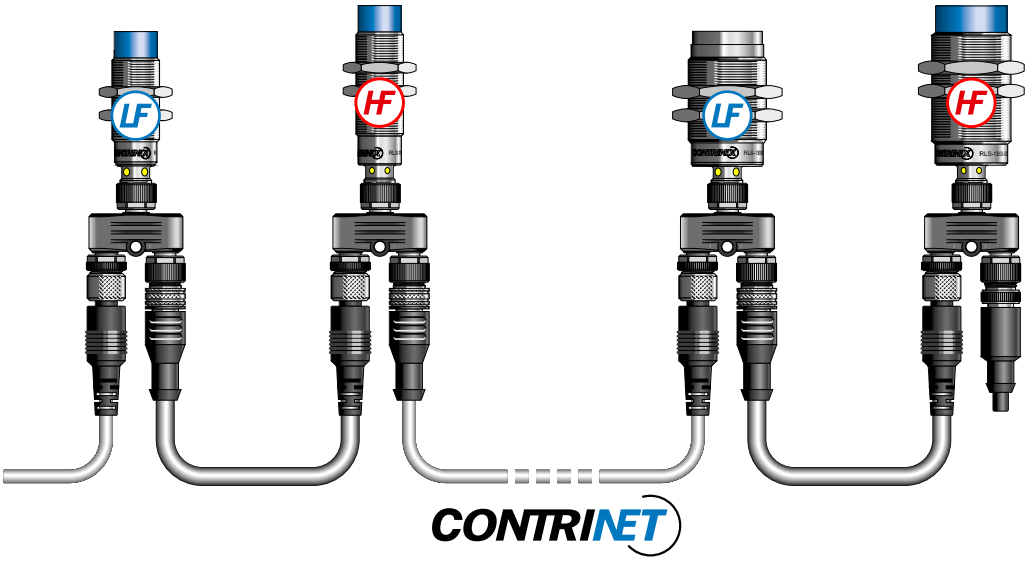

ContriNet is the RFID network of Contrinex. It is an RS485 physical network with a specific Contrinex protocol. Full documentation is provided.

ContriNet allows LF and/or HF Read/Write Modules to be connected in series:

- Up to 10 with one USB interface
- Up to 31 with one industrial bus interface
- Up to 254 on a half-duplex RS485 interface

While the usual interfaces allow connection of a limited number of Read/Write Modules, the ContriNet network can be used to reduce the number of interfaces, which makes the ConID system more economic.

In principle, a ContriNet network can extend to a length of 200 m.

LOW FREQUENCY

LF	RLS-1180-030		RLS-1300-030		RLS-1181-030		RLS-1301-030	
	S_{max}	D_o	S_{max}	D_o	S_{max}	D_o	S_{max}	D_o
RTP-0201-000	7.7	14.0	4.5	22.2	25.4	28.8	28.0	32.3
RTP-0301-000	11.9	23.2	12.2	26.2	25.9	32.6	28.7	36.5
RTP-0501-000	7.4	59.1	7.8	47.8	36.3	49.3	40.7	52.2
RTM-0100-000	8.4	13.0	8.6	19.0	16.5	12.6	13.4	20.7
RTM-0160-000	10.7	15.9	12.1	21.6	17.1	21.1	18.7	25.7
RTM-0260-000	12.5	22.2	12.9	23.8	22.6	28.6	26.1	21.9
RTM-2160-000	6.3	8.6			12.5	16.0	12.5	20.4
RTM-2300-000	8.6	15.4	4.4	26.5	15.6	19.9	18.0	22.6
RTF-1300-000	11.9	20.4	12.4	22.8	20.7	26.6	22.8	29.8

HIGH FREQUENCY

HF	RLS-1183-020		RLS-1303-020	
	S_{max}	D_o	S_{max}	D_o
RTP-0201-020	14	19	26	31
RTP-0301-020	29	34	36	41
RTP-0501-020	24	46	47	54
RTP-0090-020	9	13	16	22
RTP-0263-020	22	26	34	37
RTP-0502-020	42	50	60	65

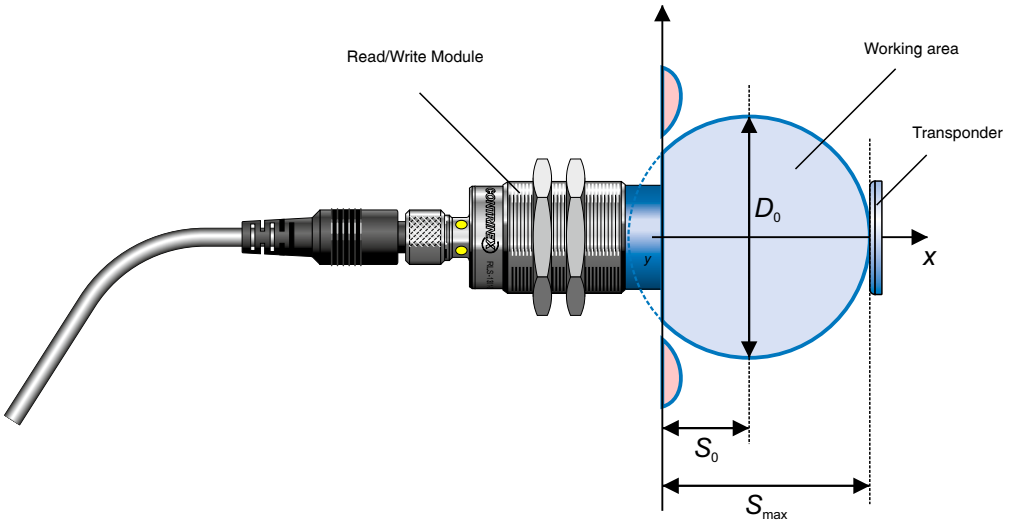

LOW FREQUENCY READ/WRITE MODULE

HOUSING SIZE	M18	M30	M18
MAX. READ/WRITE DISTANCE MM	12	13	37

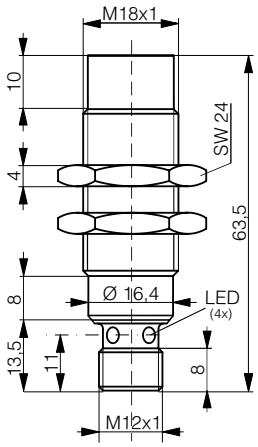

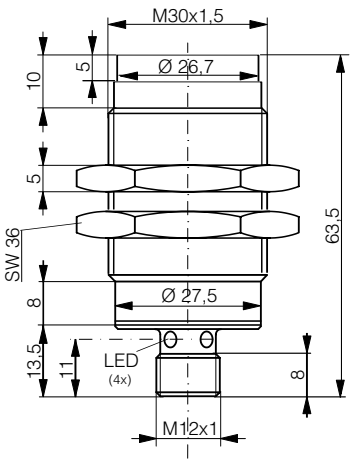

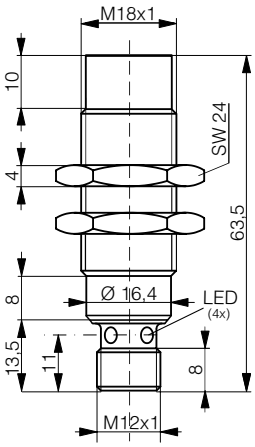

DATA			
Housing material	Stainless steel V2A	Stainless steel V2A	PBTP / chrome-plated brass
Max. current consumption	30 mA	30 mA	30 mA
Mounting	Non-embeddable	Non-embeddable	Non-embeddable
Ambient temperature range	-25…+80°C / -13…+176°F	-25…+80°C / -13…+176°F	-25…+80°C / -13…+176°F
Storage temperature range	-25…+80°C / -13…+176°F	-25…+80°C / -13…+176°F	
Connection type	Connector S12	Connector S12	Connector S12
Weight (incl. nuts)	37 g	127 g	37 g
Part reference	RLS-1180-030	RLS-1300-030	RLS-1181-030

HIGH FREQUENCY READ/WRITE MODULE

M30	M18	M30
41	42	60

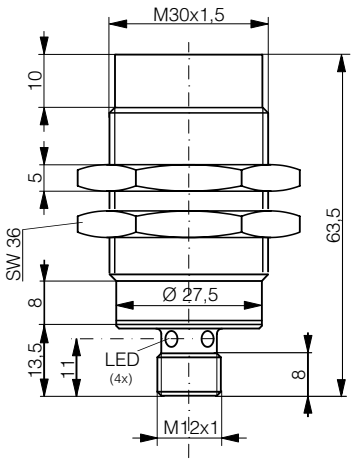

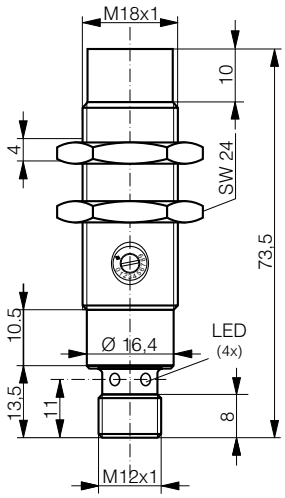

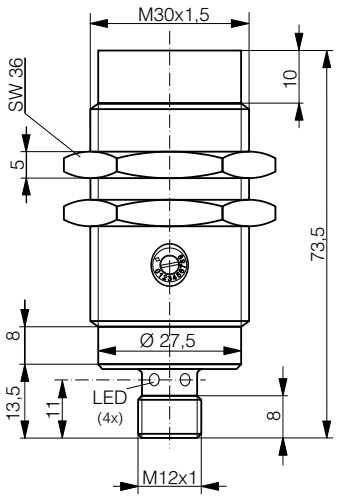

PBTP / chrome-plated brass	PBTP / Stainless steel V2A	PBTP / Stainless steel V2A
30 mA	60 mA	60 mA
Non-embeddable	Non-embeddable	Non-embeddable
-25…+80°C / -13…+176°F	-25…+80°C / -13…+176°F	-25…+80°C / -13…+176°F
Connector S12	Connector S12	Connector S12
127 g	37 g	95 g
RLS-1301-030	RLS-1183-020	RLS-1303-020

CONTRINET INTERFACES

HOUSING SIZE MM	100 X 52 X 64
FIELDBUS	**PROFIBUS-DP**

AT A GLANCE

- Compact, ready-to-use device
- Allows connection of ContriNet to an industrial fieldbus
- Synthetic housing in ABS
- Mounting on rail DIN EN 60715

FIELDBUS

PROFIBUS-DP	RIS-1053-120
DeviceNet	RIS-1053-220
EtherNet/IP	RIS-1053-320
PROFInet IO	RIS-1053-520
EtherCAT	RIS-1053-620
POWERLINK	RIS-1053-820

FIRMWARE

On SD card

Selectable using the RIS-1053-X20 card configurator software

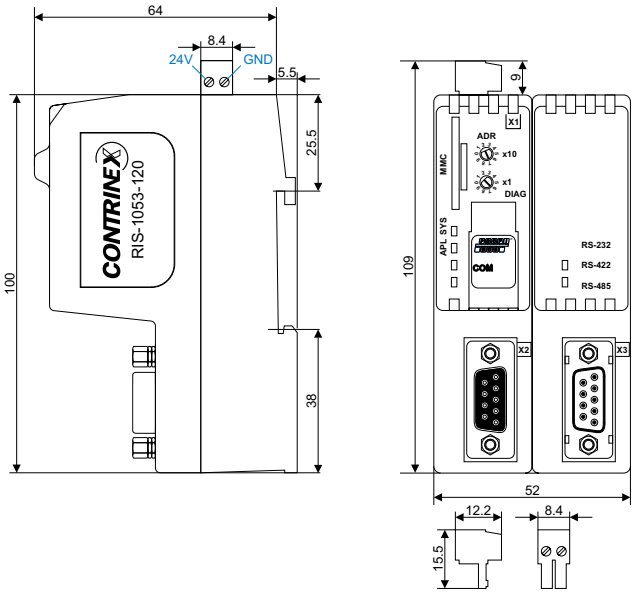

DATA

Housing material	ABS
Mounting	DIN rail EN 60715
Ambient temperature range	0 … +50°C / +32 … +122°F
Storage temperature range	0 … +50°C / +32 … +122°F
Weight	150 g
Part reference	RIS-1053-120

100 X 52 X 64	100 X 52 X 64
DEVICENET	ETHERNET/IP / PROFINET IO ETHERCAT / POWERLINK

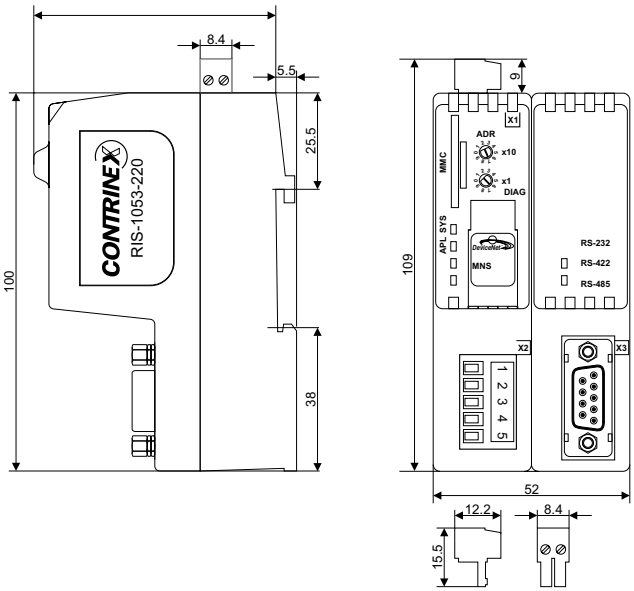

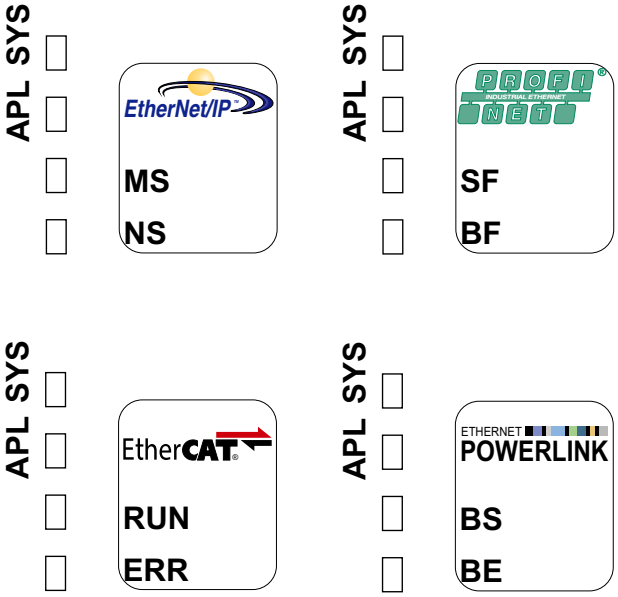

ABS	ABS
DIN rail EN 60715	DIN rail EN 60715
0 … +50°C / +32 … +122°F	0 … +50°C / +32 … +122°F
0 … +50°C / +32 … +122°F	0 … +50°C / +32 … +122°F
150 g	150 g
RIS-1053-220	RIS-1053-E20

CONTRINET

CONTRINET APPLICATION WITH INTERFACES

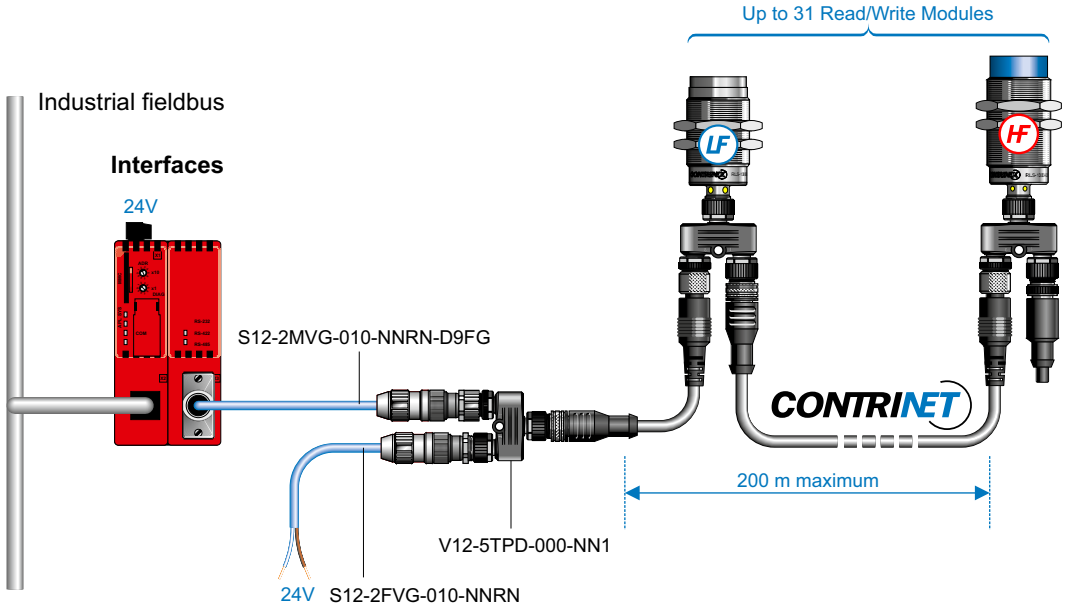

ACCESSORIES TO CONNECT INTERFACES TO CONTRINET

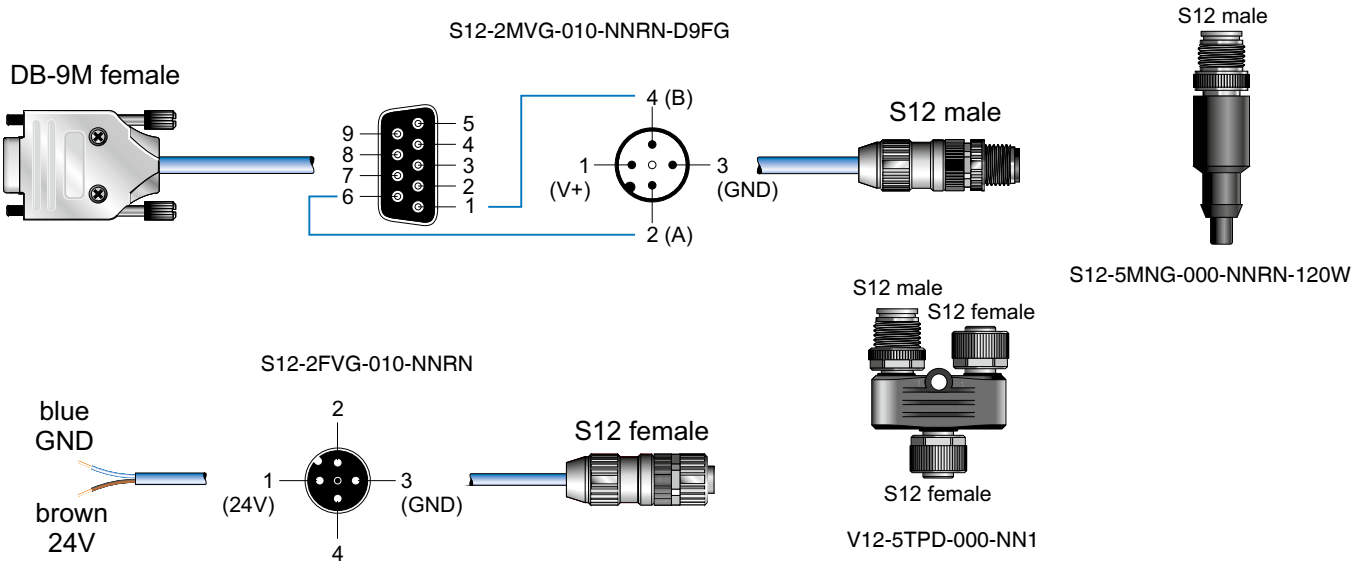

*Other cables available page 49

DATA

S12-2MVG-010-NNRN-D9FG	S12 - DB9 RIS HF PVC 1 m
S12-2FVG-010-NNRN	24V - S12 power supply cable
V12-5TPD-000-NN1	S12 T-connector
S12-4MNG-000-NNT2	S12 male connector
S12-4FNG-000-NNT2	S12 female connector
S12-5MNG-000-NNRN-120W	S12 ContriNet terminator 120 Ω

TCP/IP INDUSTRIAL INTERFACE

RIS-1613-400

ACCESSORIES TO CONNECT TCP/IP INTERFACE TO CONTRINET

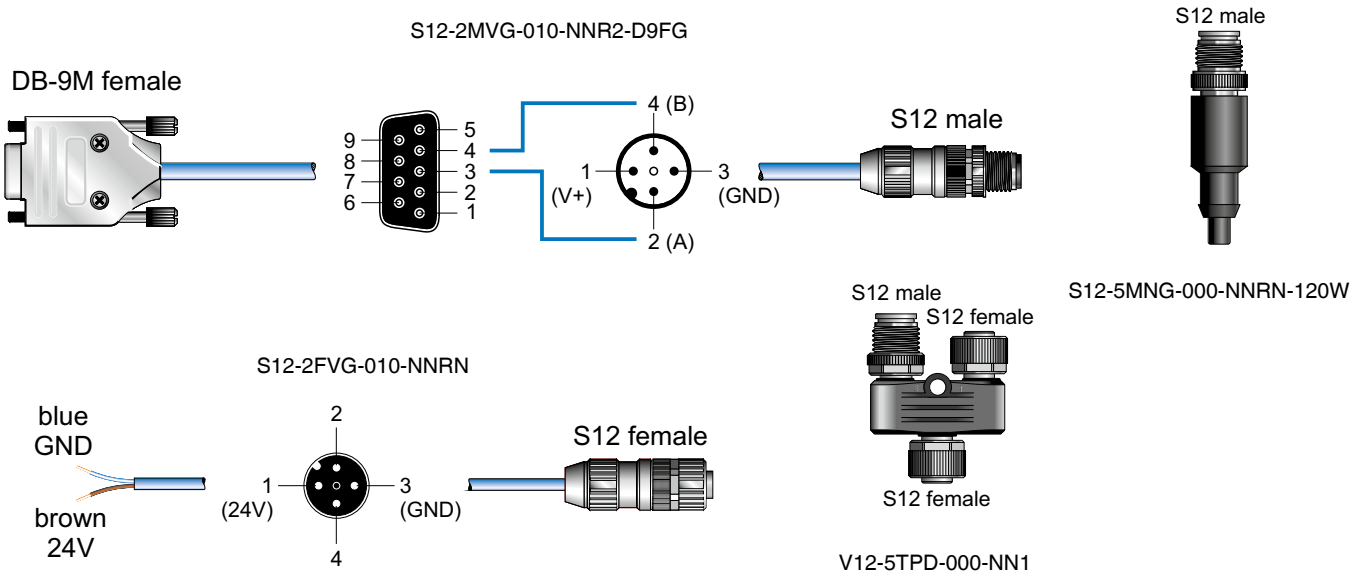

DATA

S12-2MVG-010-NNR2-D9FG	DB9 - S12 cable
S12-2FVG-010-NNRN	24V - S12 power supply cable
V12-5TPD-000-NN1	S12 T-connector
S12-5MNG-000-NNRN-120W	S12 ContriNet terminator 120 Ω

APPLICATION WITH CONNECTOR MINICONNECT

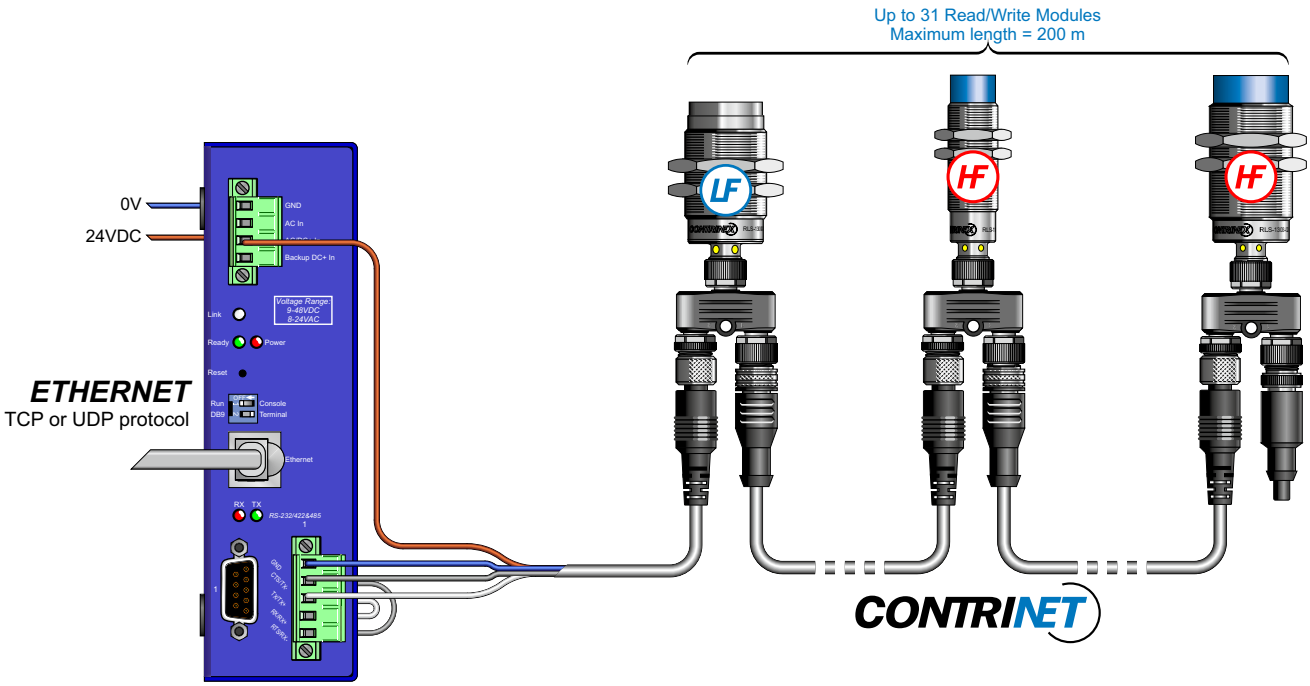

RIS-1613-400 Miniconnect

APPLICATION WITH CONNECTOR DB-9M

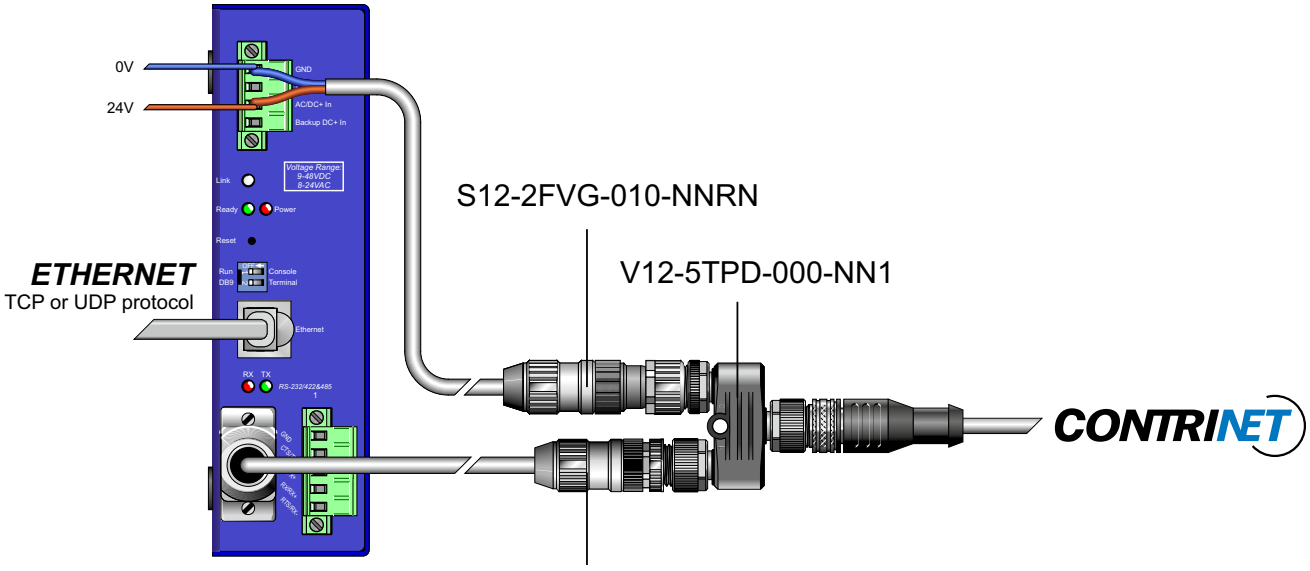

RIS-1613-400 DB-9M

S12-2MVG-010-NNR2-D9FG

USB ADAPTOR

HOUSING SIZE MM

67 X 66 X 28

AT A GLANCE

- Synthetic ABS housing
- Serial RS485 connection to ContriNet
- USB connection to control PC

LEDS

Red LED:

Describes the connection control PC - USB connector.

Green LED:

Indicates that the device is fed by an external power supply unit.

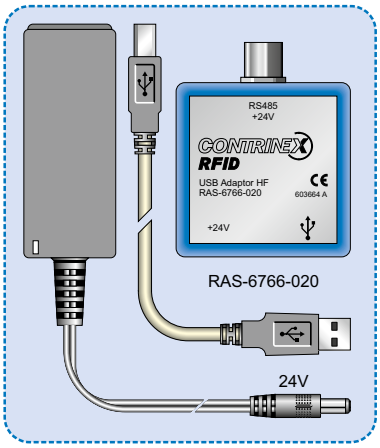

The set contains:
1 USB adaptor, 1 power supply, 1 USB cable

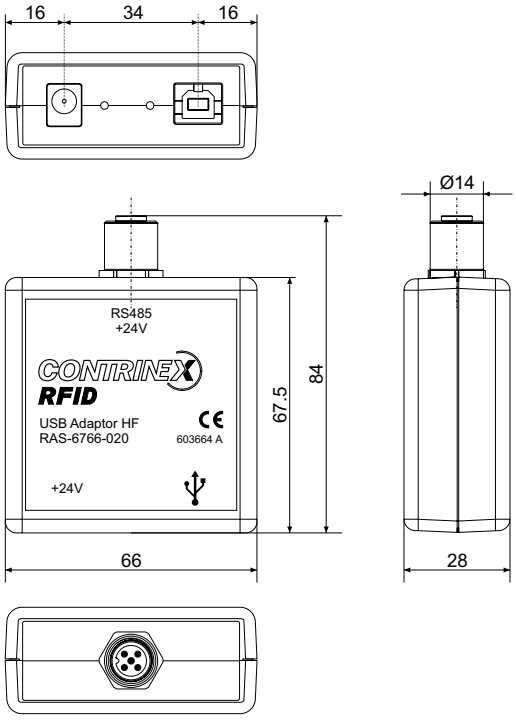

DATA

Housing material	ABS
Power supply	24 V
Max. current consumption	625 mA
Connection (RS485 side)	Connector S12
Ambient temperature range	0 … +50°C / +32 … +122°F (with external power supply unit)
Storage temperature range	-40 … +85°C / -40 … +185°F
Weight	67 g
Part reference	RAS-6766-020

APPLICATION WITH USB ADAPTOR

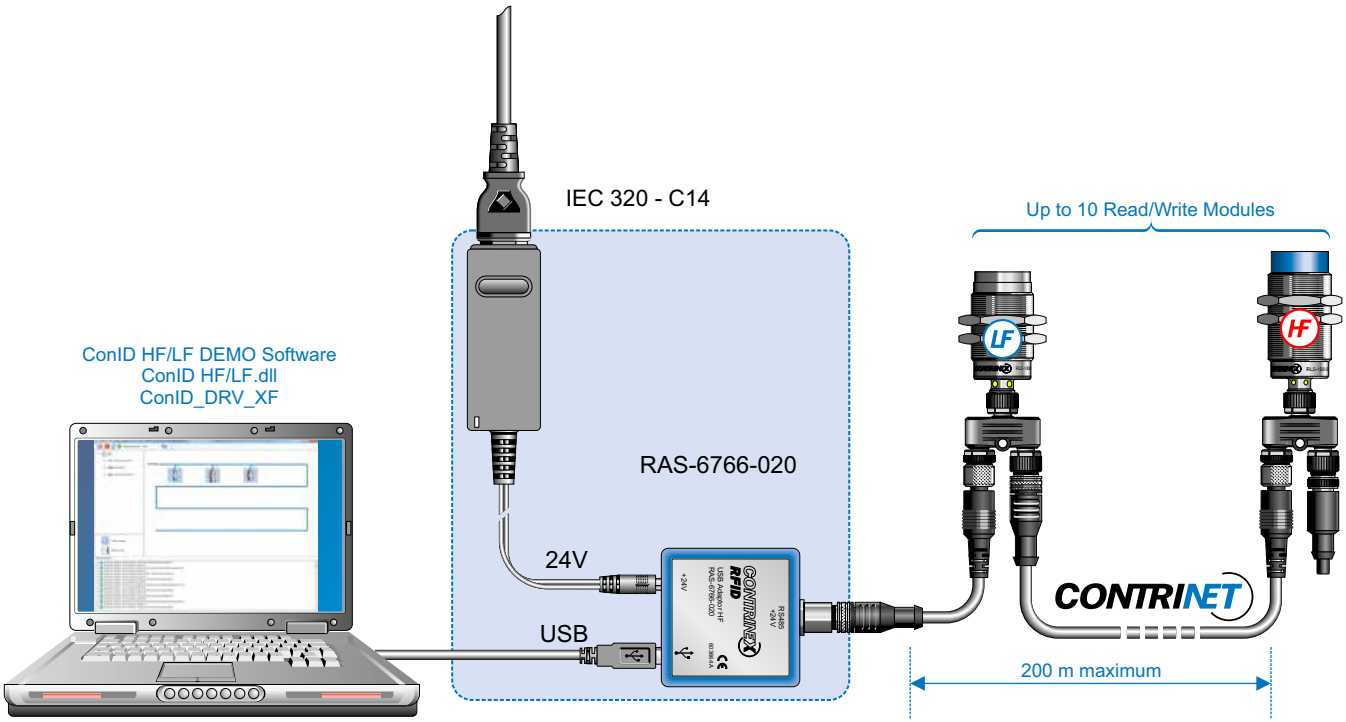

CONNECTION

The adaptor acts as the interface between a network of Read/Write Modules and the USB port of the control PC. The delivery package includes a USB cable.

EXTERNAL POWER SUPPLY UNIT

An external power supply unit (24V / 15W, 625 mA) is included in the delivery package.

DRIVERS AND SOFTWARE

Drivers (ConID Driver XX) compatible with the various Windows versions and software for demonstration and training use (ConID HF/LF) can be downloaded from the Contrinex website.

HF


LF


HF
LF

USB R/W MODULES

LOW FREQUENCY

HIGH FREQUENCY

KEY ADVANTAGES

- ✓ Direct connection of Read/Write Module (RWM) to PC
- ✓ Compatible with ConID LF/HF DEMO software
- ✓ LF and HF types in sizes M18 and M30

USB R/W MODULES

LOW FREQUENCY USB READ/WRITE MODULE

HOUSING SIZE	M18	M30
MAX. READ/WRITE DISTANCE MM	28	38

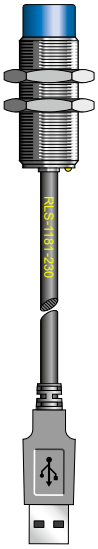

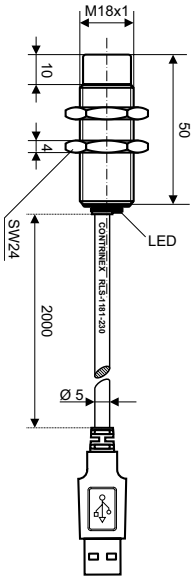

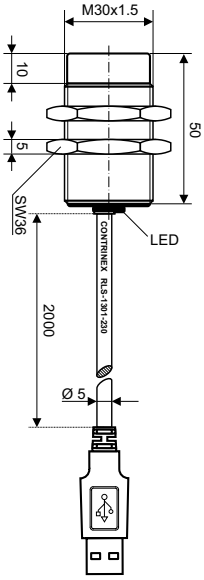

DATA		
Housing material	PBTP / chrome-plated brass	PBTP / chrome-plated brass
Max. current consumption	200 mA	200 mA
Mounting	Non-embeddable	Non-embeddable
Ambient temperature range	-25 ... +80°C / -13 … +176°F	-25 ... +80°C / -13 … +176°F
Storage temperature range	-25 ... +80°C / -13 … +176°F	-25 ... +80°C / -13 … +176°F
Connection type	USB A male	USB A male
Weight (incl. nuts)	107 g	144 g
Part reference	RLS-1181-230	RLS-1301-230

HIGH FREQUENCY USB READ/WRITE MODULE

M18	M18	M30	M30
35	35	50	50
	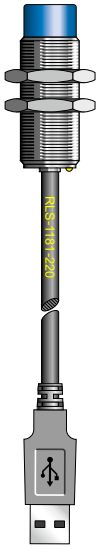		
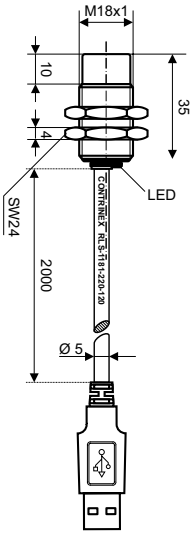	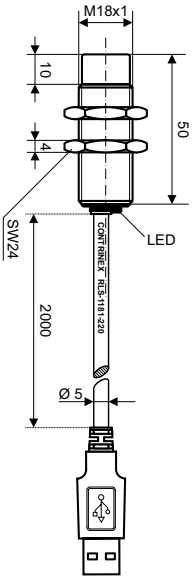	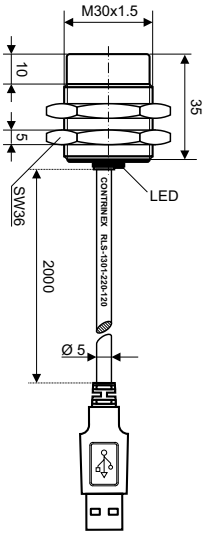	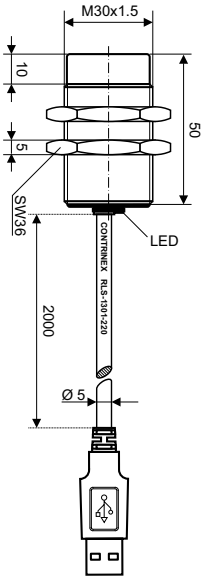
PBTP / chrome-plated brass	PBTP / chrome-plated brass	PBTP / chrome-plated brass	PBTP / chrome-plated brass
200 mA	200 mA	200 mA	200 mA
Non-embeddable	Non-embeddable	Non-embeddable	Non-embeddable
-25 ... +70°C / -13 … +158°F	-25 ... +70°C / -13 … +158°F	-25 ... +70°C / -13 … +158°F	-25 ... +70°C / -13 … +158°F
-25 ... +70°C / -13 … +158°F	-25 ... +70°C / -13 … +158°F	-25 ... +70°C / -13 … +158°F	-25 ... +70°C / -13 … +158°F
USB A male	USB A male	USB A male	USB A male
97 g	107 g	144 g	165 g
RLS-1181-220-120	RLS-1181-220	RLS-1301-220-120	RLS-1301-220

APPLICATION WITH USB READ/WRITE MODULE

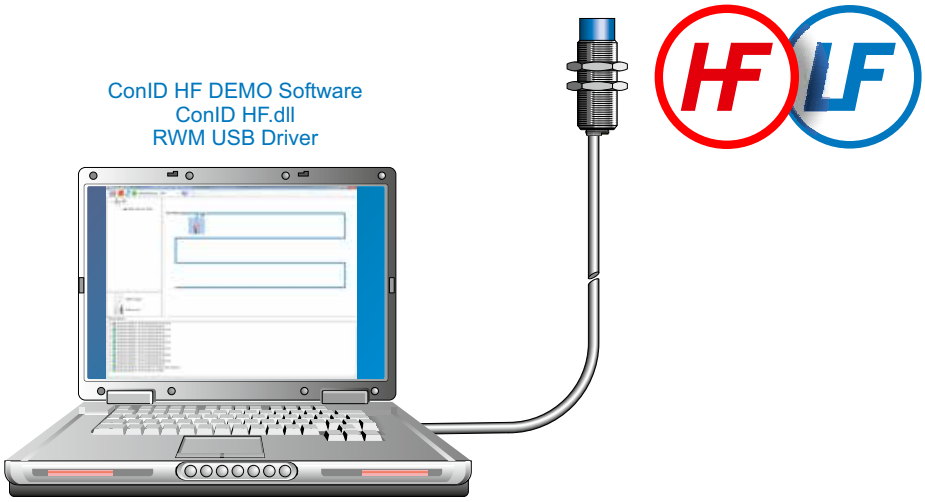

The default address of USB Read/Write Modules is 254.

USB Read/Write Modules are not compatible with ContriNet but they have the same firmware. In particular, they are compatible with DEMO program ConID HF/LF.

HF


LF


ConIDH01 081020
READ
A/N
ON OFF
MEM
DEL
MENU
TIME
DATE
MSG
SP
CONTRINEX


ConID HF Handfield
UID
SCAN
CMD
Read
Block start address :
Number of blocks :
Execute
CMD
Data
Log
Config

HANDHELD DEVICES

LF LOW FREQUENCY

HF HIGH FREQUENCY

KEY ADVANTAGES

- ✓ Rugged industrial device with docking station
- ✓ Demo programs for all basic operations
- ✓ ConID LF and ConID HF software
- ✓ Operating system of HF version: Windows Mobile 6.1
- ✓ Integrated barcode scanner with HF version

HANDHELD DEVICES

155 X 75 X 49 mm (WITH DOCKING STATION)

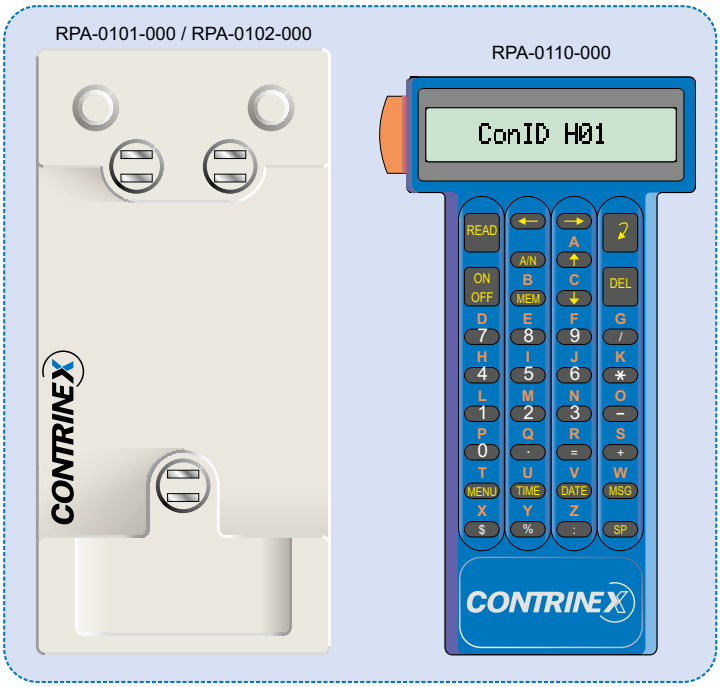

RPA-0111-000 / RPA-0112-000

The handheld LF read/write device may be used for writing to and reading ConID transponders. Its most important features are as follows:

- Portable and light
- No connector
- Robust and ergonomic housing
- Simple navigation
- Integrated RFID Read/Write Module
- Alphanumeric LC display with 16 characters
- 34 alphanumeric and function keys
- Integrated clock and calendar
- Belt clip
- 128 KB memory

The handheld read/write device features a NiMH battery pack, which charges automatically when positioned on its docking station. The latter enables the read/write device to communicate by means of an RS232 interface.

DATA

RPA-0111-000	Handheld read/write device with docking station with EU adapter
RPA-0110-000	Handheld read/write device without docking station
RPA-0101-000	Docking station with EU adapter
RPA-0112-000	Handheld read/write device with docking station with US adapter
RPA-0102-000	Docking station with US adapter

170 X 79 X 40 MM (WITH DOCKING STATION)

The handheld HF read/write system (RPA-0213-120) consists of a handheld read/write device with Bluetooth, docking station with USB interface and extra battery.

- Portable and light
- Robust and ergonomic housing
- Integrated RFID Read/Write Module
- RFID HF 13.56 MHz
- 1D and 2D barcode reader
- Integrated clock and calendar
- The docking base-station is used to recharge the handheld read/write device and to recharge an extra battery
- Communication between the handheld read/write device and a computer is via USB or Bluetooth
- ConID HF Handheld software provides status, write and read operations and enables creation of an instruction list

DATA

RPA-0213-120	Handheld read/write device with docking station


LF
CONTRINEX
LF
CONTRINEX

ACCESSORIES

LOW FREQUENCY

HIGH FREQUENCY

LF accessories

✓ Cables
✓ RFID couplers
✓ Cables for RFID couplers

HF accessories

✓ Standard cables
✓ Quick-lock cables

SHIELDED CABLES

PART REFERENCE	TYPE	CABLE	LENGTH
S12-4FUG-020-NWRN-12MG	Socket straight / plug straight	PUR	2 m
S12-4FUG-050-NWRN-12MG	Socket straight / plug straight	PUR	5 m

STANDARD CABLES

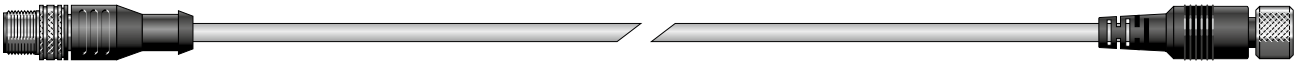

PART REFERENCE	TYPE	CABLE	LENGTH
S12-4FVG-006-12MG	Socket straight / plug straight	PVC	0.6 m
S12-4FVG-020-12MG	Socket straight / plug straight	PVC	2 m
S12-4FVG-050-12MG	Socket straight / plug straight	PVC	5 m
S12-4FUG-006-12MG	Socket straight / plug straight	PUR	0.6 m
S12-4FUG-020-12MG	Socket straight / plug straight	PUR	2 m
S12-4FUG-050-12MG	Socket straight / plug straight	PUR	5 m

QUICK-LOCK CABLES

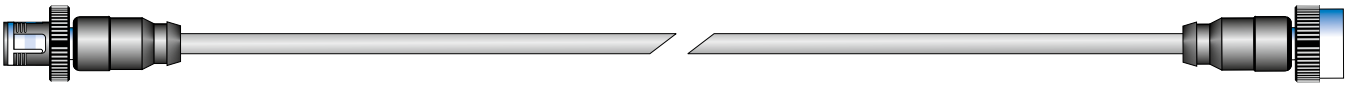

PART REFERENCE	TYPE	CABLE	LENGTH
S12-4FVG-003-NNNQ-12MG	Socket straight / plug straight	PVC	0.3 m
S12-4FVG-006-NNNQ-12MG	Socket straight / plug straight	PVC	0.6 m
S12-4FVG-010-NNNQ-12MG	Socket straight / plug straight	PVC	1 m
S12-4FVG-015-NNNQ-12MG	Socket straight / plug straight	PVC	1.5 m
S12-4FVG-020-NNNQ-12MG	Socket straight / plug straight	PVC	2 m
S12-4FVW-003-NNNQ-12MG	Socket right angle / plug straight	PVC	0.3 m
S12-4FVW-006-NNNQ-12MG	Socket right angle / plug straight	PVC	0.6 m
S12-4FVW-010-NNNQ-12MG	Socket right angle / plug straight	PVC	1 m
S12-4FVW-015-NNNQ-12MG	Socket right angle / plug straight	PVC	1.5 m
S12-4FVW-020-NNNQ-12MG	Socket right angle / plug straight	PVC	2 m
S12-4FUG-003-NNNQ-12MG	Socket straight / plug straight	PUR	0.3 m
S12-4FUG-006-NNNQ-12MG	Socket straight / plug straight	PUR	0.6 m
S12-4FUG-010-NNNQ-12MG	Socket straight / plug straight	PUR	1 m
S12-4FUG-015-NNNQ-12MG	Socket straight / plug straight	PUR	1.5 m
S12-4FUG-020-NNNQ-12MG	Socket straight / plug straight	PUR	2 m
S12-4FUW-003-NNNQ-12MG	Socket right angle / plug straight	PUR	0.3 m
S12-4FUW-006-NNNQ-12MG	Socket right angle / plug straight	PUR	0.6 m
S12-4FUW-010-NNNQ-12MG	Socket right angle / plug straight	PUR	1 m
S12-4FUW-015-NNNQ-12MG	Socket right angle / plug straight	PUR	1.5 m
S12-4FUW-020-NNNQ-12MG	Socket right angle / plug straight	PUR	2 m

RFID COUPLERS

AT A GLANCE

- Metal threaded cylindrical housings
- Sensing face of PBTP (polybutylene terephthalate) or stainless steel V2A
- Insensitive to dirt
- Passive (without power supply)

An RFID coupler consists of two coupling heads linked by a cable. It is passive and enables data to be transferred between the Read/Write Module and the transponder, acting as a contact-free extension for data transfer.

A coupler is used whenever a double mechanical interface is required.

CONNECTION

The coupling heads feature 4-pole S12 connectors. The cable connectors have been designed specifically for use with RFID couplers and are equipped with 4-pole sockets at both ends.

The coupling heads must not be connected to the power supply, nor to an interface device.

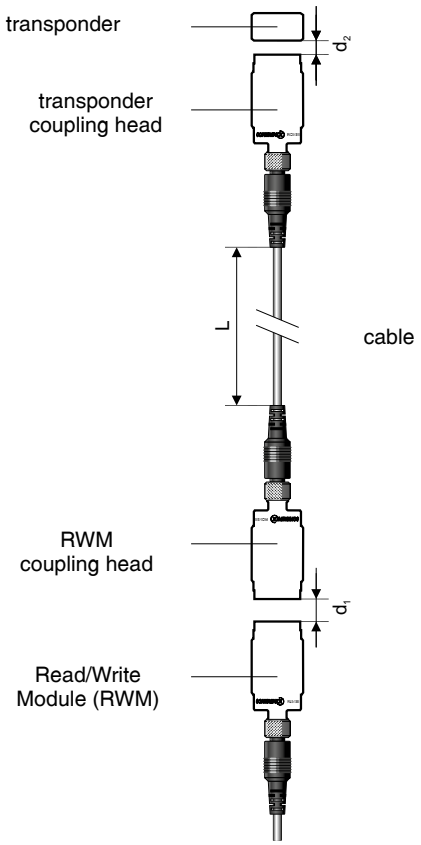

HOUSING SIZE	

DATA	
Housing material	
Sensing face material	
Mounting	
Ambient temperature range	
Storage temperature range	
Connection type	
Degree of protection	
Weight (with nuts)	
Part reference	

M18	M30	M18	M30
COUPLING HEAD	COUPLING HEAD	COUPLING HEAD	COUPLING HEAD




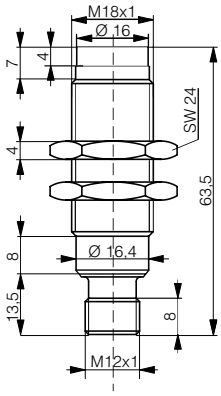

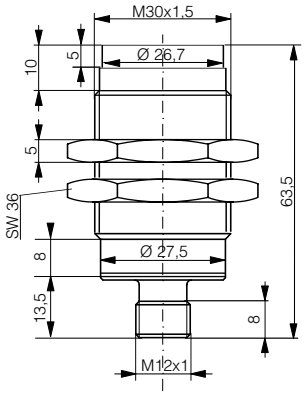

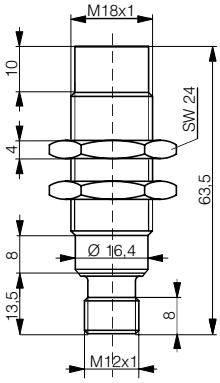

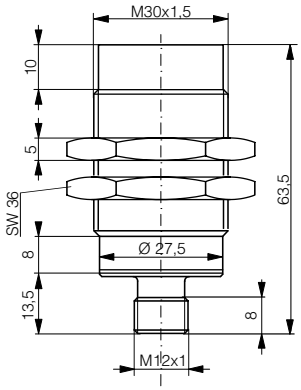

Stainless steel V2A	Stainless steel V2A	Chrome-plated brass	Chrome-plated brass
Stainless steel V2A	Stainless steel V2A	PBTP	PBTP
Non-embeddable	Non-embeddable	Non-embeddable	Non-embeddable
-25 … +80°C / -13 … +176°F	-25 … +80°C / -13 … +176°F	-25 … +80°C / -13 … +176°F	-25 … +80°C / -13 … +176°F
-25 … +80°C / -13 … +176°F	-25 … +80°C / -13 … +176°F	-25 … +80°C / -13 … +176°F	-25 … +80°C / -13 … +176°F
Connector S12	Connector S12	Connector S12	Connector S12
IP 67	IP 67	IP 67	IP 67
51 g	120 g	51 g	120 g
RCS-1180-000*	RCS-1300-000*	RCS-1181-000*	RCS-1301-000*

* Coupling heads must not be connected to the power supply, nor to an interface device!

CABLES FOR RFID COUPLERS

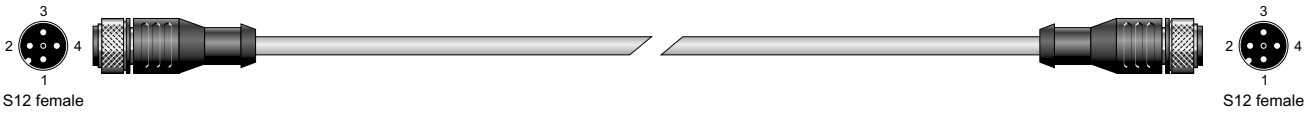

PART REFERENCE	TYPE	CABLE	LENGTH
S12-4FUG-010-NNRN-12FG	Socket straight / socket straight	PUR	1 m
S12-4FUG-020-NNRN-12FG	Socket straight / socket straight	PUR	2 m
S12-4FUG-050-NNRN-12FG	Socket straight / socket straight	PUR	5 m

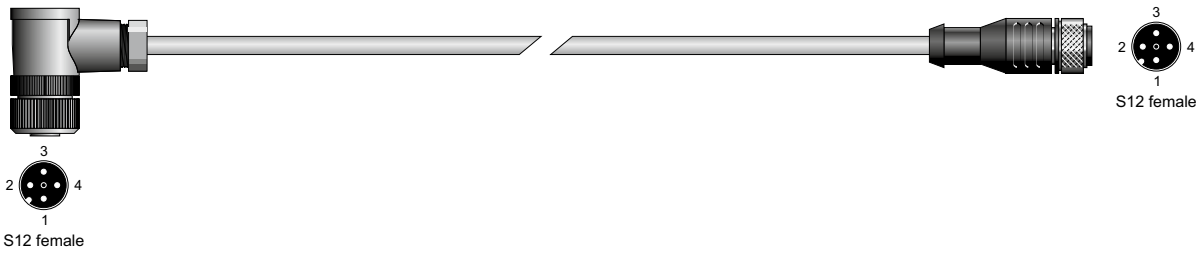

PART REFERENCE	TYPE	CABLE	LENGTH
S12-4FUW-010-NNRN-12FG	Socket right angle / socket straight	PUR	1 m
S12-4FUW-020-NNRN-12FG	Socket right angle / socket straight	PUR	2 m
S12-4FUW-050-NNRN-12FG	Socket right angle / socket straight	PUR	5 m

PART REFERENCE	TYPE	CABLE	LENGTH
S12-4FUW-010-NNRN-12FW	Socket right angle / socket right angle	PUR	1 m
S12-4FUW-020-NNRN-12FW	Socket right angle / socket right angle	PUR	2 m
S12-4FUW-050-NNRN-12FW	Socket right angle / socket right angle	PUR	5 m

HF


LF

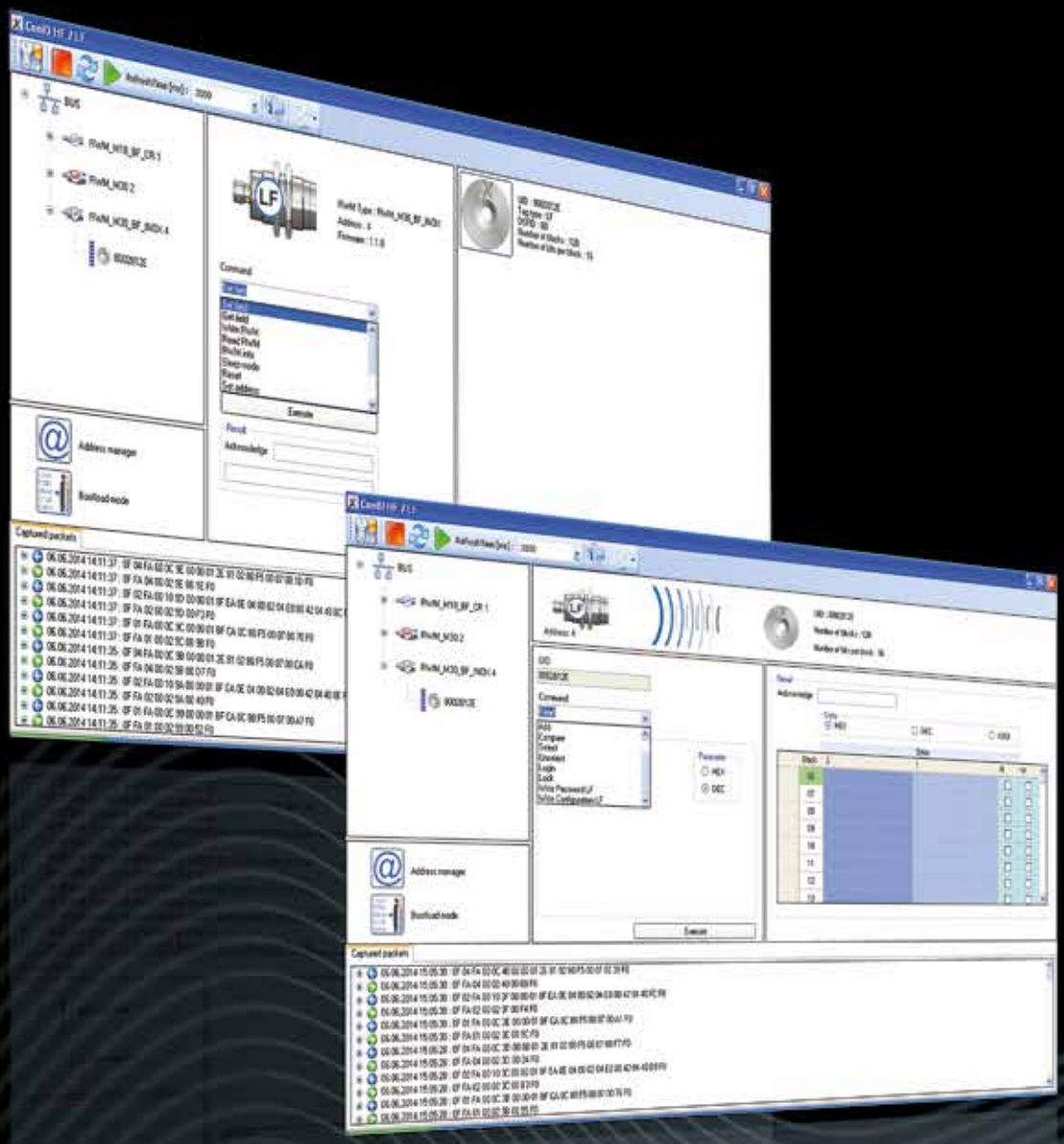
Address manager
Bootload mode
Execute
Captured packets

CONTRINET TOOL FOR DEMONSTRATION, TRAINING AND DEVELOPMENT

SOFTWARE

LF LOW FREQUENCY

HF HIGH FREQUENCY

KEY ADVANTAGES

- ✓ User-friendly screen
- ✓ Intuitive control
- ✓ Access to individual components
- ✓ Detailed frame analysis

DEMONSTRATION AND TRAINING SOFTWARE, CONID HF-LF

ConID HF-LF software allows users to familiarize themselves with Contrinex RFID and, in particular, understand how ContriNet works.

A user-friendly screen allows intuitive control of the various program options. It is divided into five fields, allowing the user to access a specific component to which chosen commands will apply.

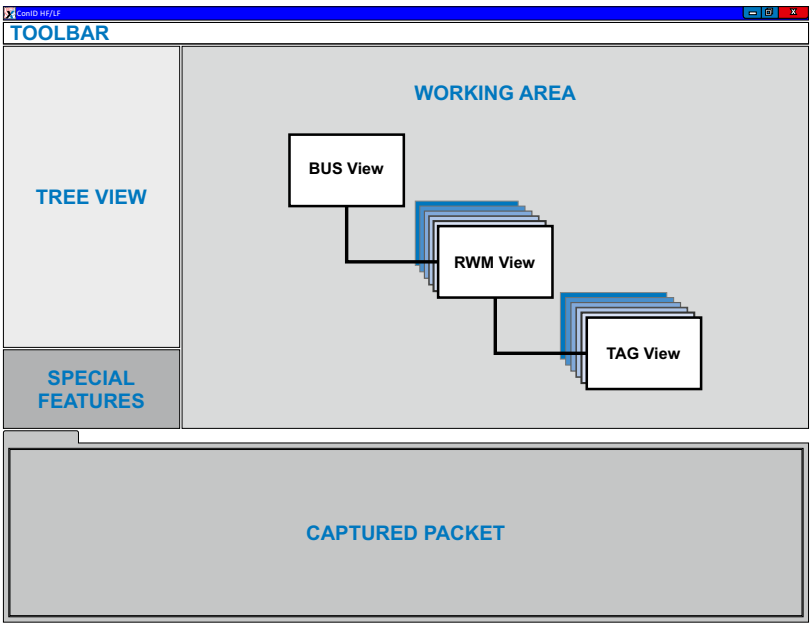

TREE VIEW

The Tree View describes the ContriNet network as a whole, i.e. all Read/Write Modules connected to the network and the transponders in front of the RWMs.

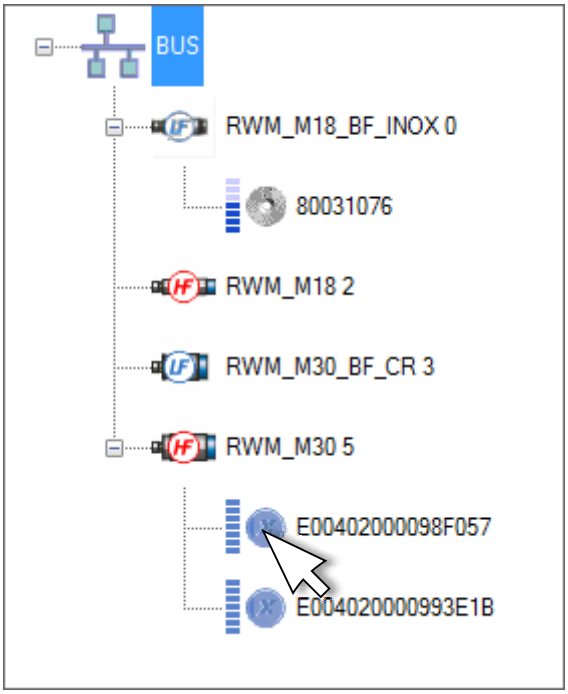

WORKING AREA

To access commands specific to any one of these components, just click the mouse on a component to display in the work area all the possible commands for that component. For example, the following shows the work area displayed after clicking on an HF transponder.

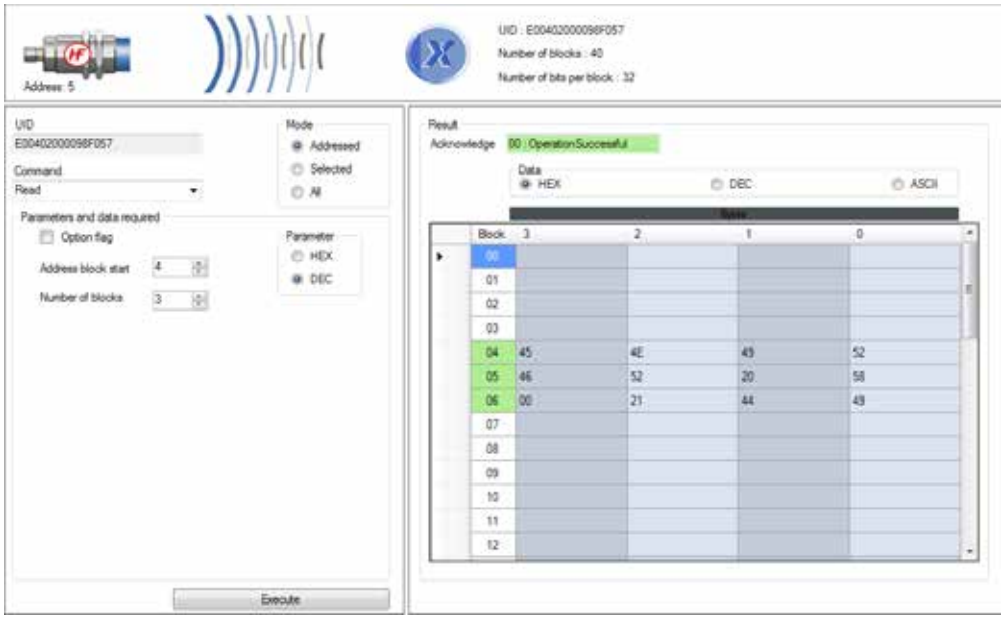

The work area consists of three fields:

- The upper field showing the component involved and its attributes
- The command field, below left
- The results box, below right

CAPTURED PACKETS

Another interesting field concerns captured packets. This field contains frames of all past transactions between the PC controller and a specific Read/Write Module.

These frames can be opened, allowing the user to decrypt each byte in the frame.

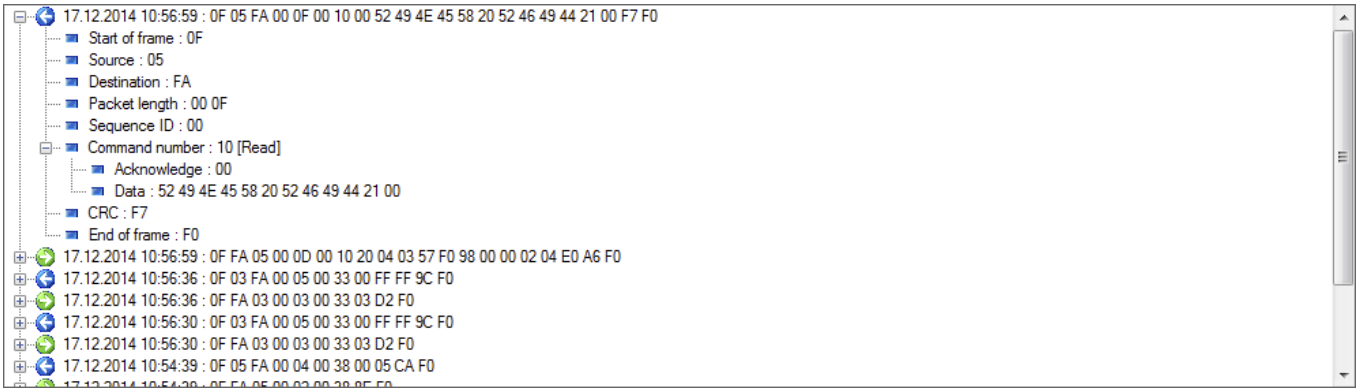

This tool is extremely useful because it shows the structure of exchanged frames and provides full information to the integrator during programming of the controller or PLC that controls the industrial bus.

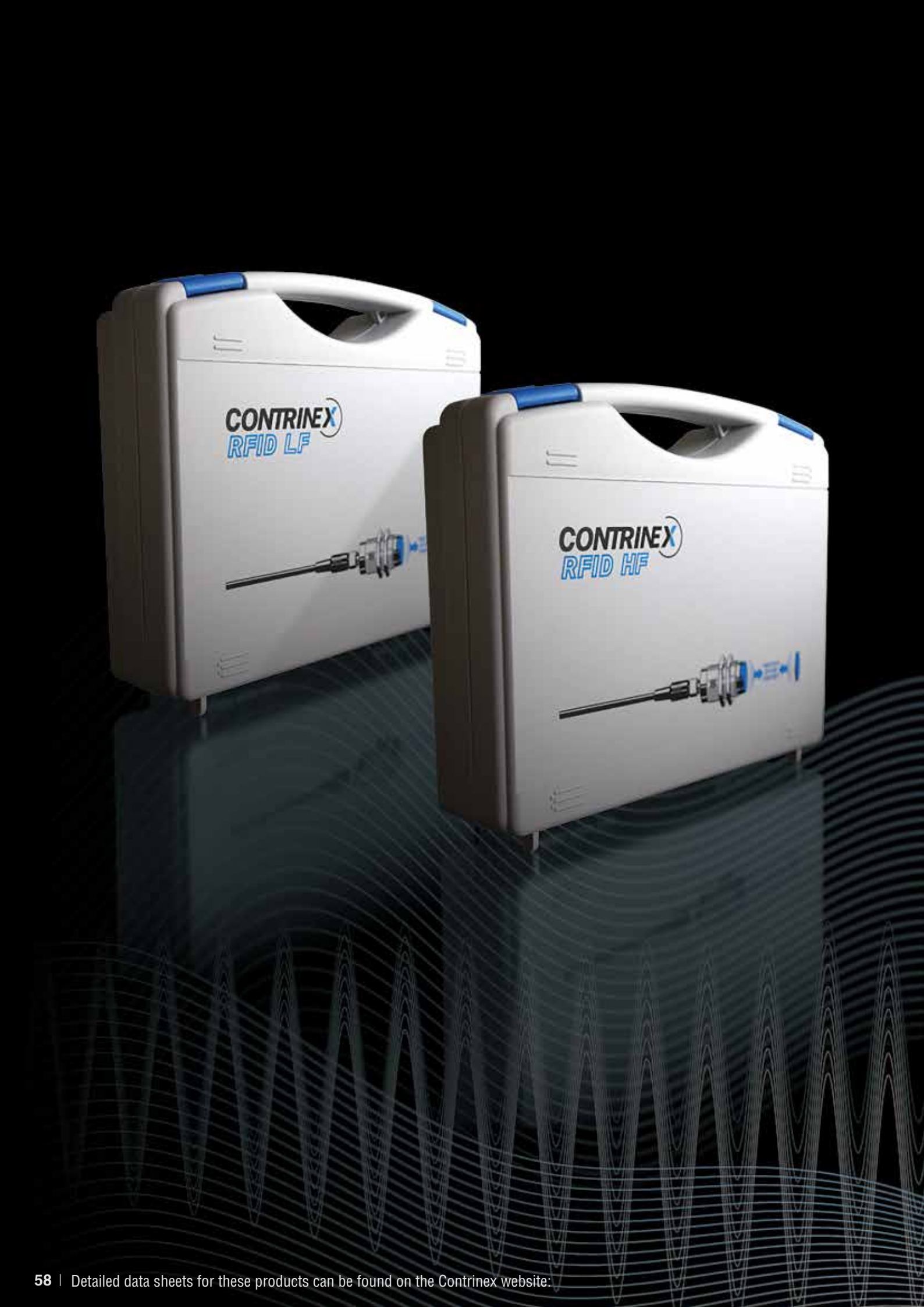
CONTRINEX
RFID LF
CONTRINEX
RFID HF

STARTER KITS

LF LOW FREQUENCY

HF HIGH FREQUENCY

HIGHLIGHTS

- ✓ Everything you need to get started with RFID
- ✓ LF kit and HF kit
- ✓ 1 USB adaptor per kit
- ✓ 2 Read/Write Modules per kit
- ✓ 1 set of transponders per kit
- ✓ Cable connectors
- ✓ Free ConID LF/HF software

STARTER KITS

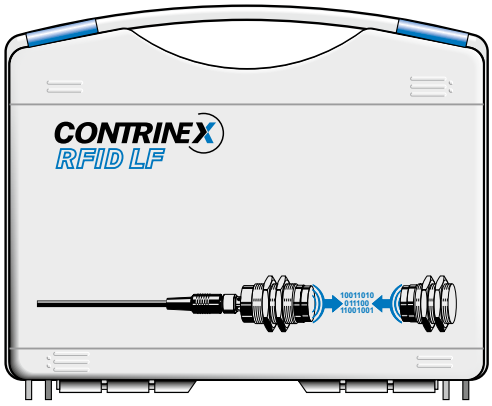

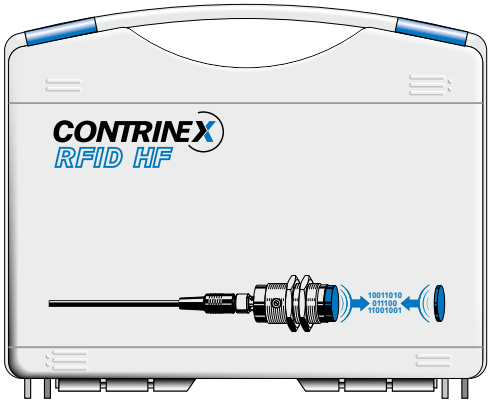

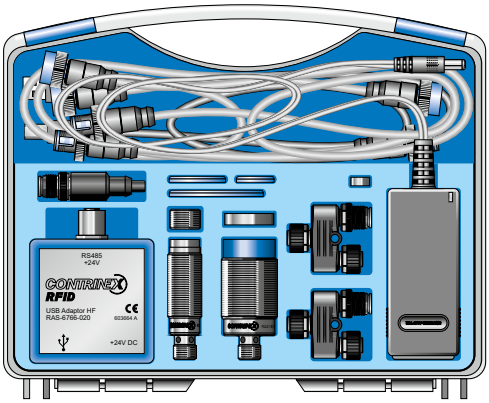

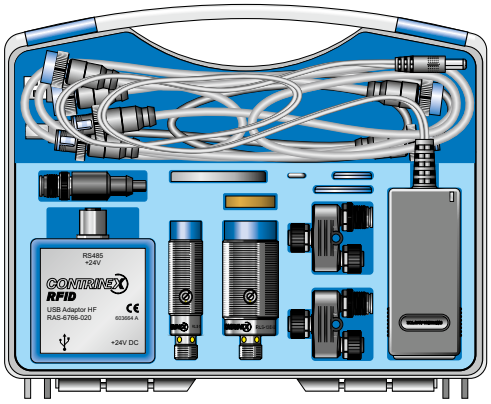

The starter kit contains all components necessary for a simple RFID application:

- 1 USB adaptor RAS-6766-020
- 1 all-metal Read/Write Module M18
- 1 Read/Write Module M30
- 1 set of transponders
- Cable connectors

The necessary ConID software can be downloaded from www.contrinex.com.

The starter kit contains all components necessary for a simple RFID application:

- 1 USB adaptor RAS-6766-020
- 1 Read/Write Module M18
- 1 Read/Write Module M30
- 1 set of transponders
- Cable connectors

The necessary ConID software can be downloaded from www.contrinex.com.

DATA

STARTER-KIT RFID LF	1 USB adaptor, 2 RWMs, 6 tags, 2 T-connectors, 1 power supply, 1 USB cable, 2 connecting cables
STARTER-KIT RFID HF	1 USB adaptor, 2 RWMs, 5 tags, 2 T-connectors, 1 power supply, 1 USB cable, 2 connecting cables

HF


LF

MARKET-LEADING INNOVATION

1979 Sensor business starts with self-contained subminiature inductive sensors: Ø4 mm (instead of M8 before)

1982 Launch of inductive sensor with patented Condist® technology – market leadership with operating distances 3x standard

1986 Launch of Ø3 mm inductive sensors, now market leader for subminiature inductive sensors

1996 Market launch of Ø4 mm subminiature photoelectric sensors

1999 Launch of world's first inductive sensor with full-metal housing – thanks to patented Condet® technology

2005 Integration of Contrinex's excellent performance for inductive sensors in CMOS-ASIC (Application-Specific Integrated Circuit), a proprietary development

2007 Launch of RFID products for closed loop industrial applications. First RFID product range with tags and readers in full-metal housing

2008 Launch of Safetinex®, the industrial safety product range

2009 The smart sensor is born. Launch of next generation ASIC, a "system on a chip", including IO-Link interface

2011 Development starts on Contrinex's first ASIC for photoelectric sensors

2014 Launch of photoelectric sensor with new generation Contrinex ASIC and IO-Link

Early inductive sensor produced for own use in 1973 (special version for extreme conditions)

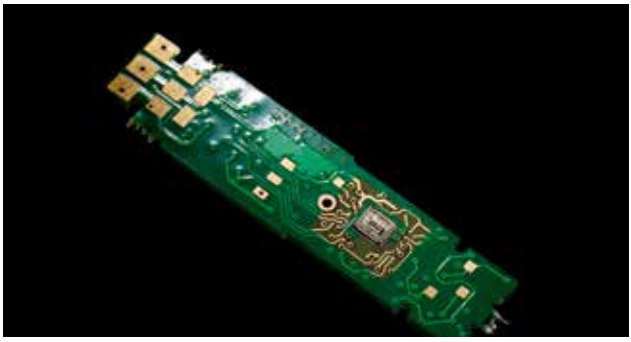

ASIC sensor technology

Safety product range

Subminiature photoelectric sensor

SENSORS

INDUCTIVE
BASIC
MINIATURE from 3 x 12 mm
EXTREME the world's toughest
EXTRA PRESSURE 100 bar
HIGH PRESSURE 1000 bar
EXTRA TEMPERATURE 120°C
HIGH TEMPERATURE 230°C
WASHDOWN Ecolab approved
ANALOG OUTPUT
WELD-IMMUNE

PHOTOELECTRIC
CYLINDRICAL SUBMINIATURE
CYLINDRICAL MINIATURE
CYLINDRICAL SMALL
CUBIC SUBMINIATURE
CUBIC MINIATURE
CUBIC SMALL
CUBIC COMPACT
FIBER-OPTIC AMPLIFIERS, FIBERS

ULTRASONIC
MINIATURE
SMALL
COMPACT

CAPACITIVE
BASIC
HIGH PERFORMANCE

SAFETY

LIGHT CURTAINS
FINGER PROTECTION
HAND PROTECTION

ACCESS CONTROL BARRIERS
ACCESS CONTROL

RFID

LOW FREQUENCY
(125 kHz technology)

SYNTHETIC components
ALL-METAL components
INTERFACES for industrial fieldbuses

HIGH FREQUENCY
(13.56 MHz technology)

STANDARD components
TAGS EMBEDDABLE IN METAL
TAGS FOR HIGH TEMPERATURE 250°C
R/W MODULES WITH USB
INTERFACES for industrial fieldbuses

For special products see Contrinex catalog, downloadable from our website: www.contrinex.com

CONTRINEX

ALL OVER THE WORLD

EUROPE
Austria
Belgium*
Croatia
Czech Republic
Denmark
Estonia
Finland
France*
Germany*
Great Britain*
Greece
Hungary
Ireland
Italy*
Luxembourg
Netherlands
Norway
Poland
Portugal*
Romania
Russian Federation
Slovakia
Slovenia
Spain
Sweden
Switzerland*
Turkey
Ukraine

AFRICA
Morocco
South Africa

THE AMERICAS
Argentina
Brazil*
Canada
Chile
Mexico*
Peru
United States*
Venezuela

ASIA
China*
India*
Indonesia
Japan*
Korea
Malaysia
Pakistan
Philippines
Singapore*
Taiwan
Thailand
Vietnam

AUSTRALASIA
Australia
New Zealand

MIDDLE EAST
Israel
United Arab Emirates

* Contrinex subsidiary

Terms of delivery and right to change design reserved.

HEADQUARTERS

CONTRINEX AG Industrial Electronics
route André Piller 50 - PO Box - CH 1762 Givisiez - Switzerland
Tel: +41 26 460 46 46 - **Fax:** +41 26 460 46 40
Internet: www.contrinex.com - **E-mail:** info@contrinex.com

www.contrinex.com

999 308 002 - KAY - 04.15 - 3'000