B27 BELT-DRIVEN ACTUATORS

B27 BELT DRIVEN LINEAR ACTUATOR

The B27 is Bimba's single rail belt driven electric linear actuator for use in many different industries and applications. From pick & place to material handling, the B27 is the starting point when looking for a high speed motion profile with medium-duty loading capability. Well-built using high quality components throughout its construction, the B27 is Bimba's first option when considering a belt drive electric actuator for general purpose applications.

PRODUCT FEATURES

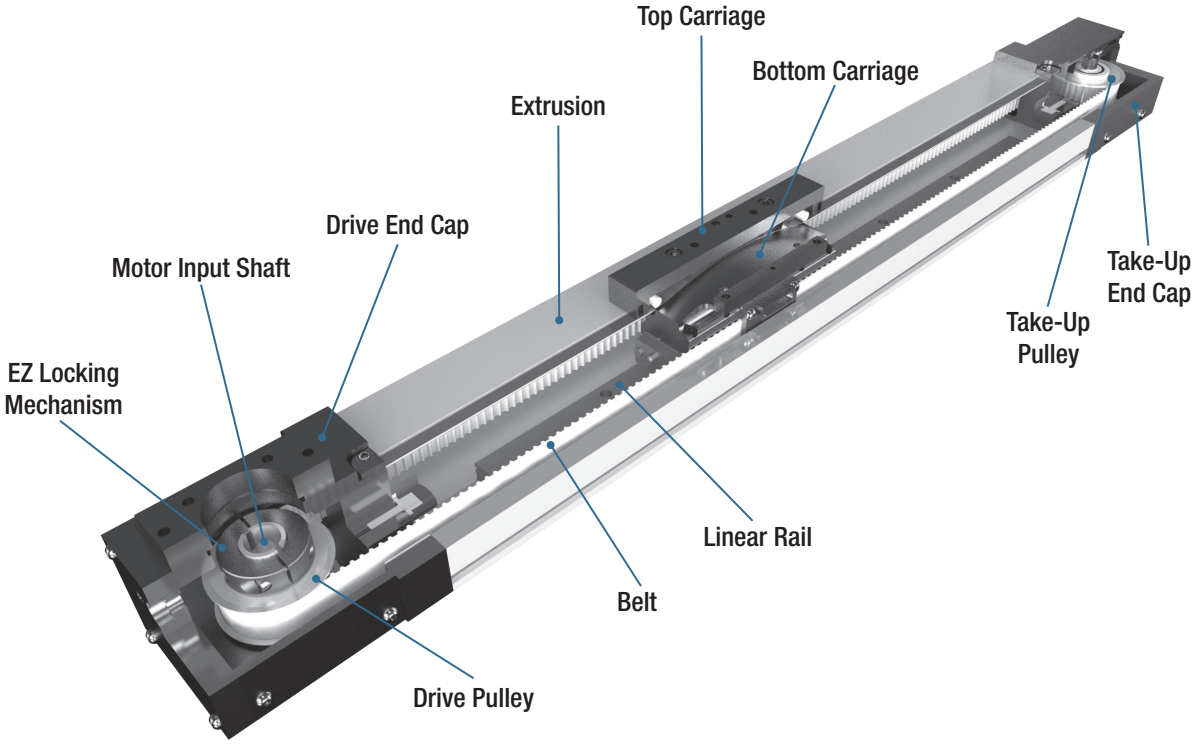

The B27 is the first option when considering a Bimba electric rodless actuator. While this electric actuator provides ample thrust and loading characteristics, its sleek yet robust design will serve as the best motion solution in numerous applications across a variety of industries. When combined with many of the same high-quality components found in all Bimba electric actuators, you can expect the same long life and reliable performance.

FEATURES AND BENEFITS

High Precision Steel Reinforced Belt

- Ideal for high speed applications
- Highest thrust per unit size
- Repeatability to 0.001”
- Long lengths: up to 110 in (2800mm) standard

Low Profile Aluminum Extrusion

- Provides better fit in tight applications

Built-in Linear Ball Rail Guide

- Maintenance free
- Self-lubricating
- Low friction
- Smooth operation
- Long life expectancy

The Bimba B27 rodless actuator uses a steel reinforced polyurethane belt that wraps around an internal drive pulley mechanism on the drive end, which is connected to a drive shaft. The drive shaft gets coupled to an external motor shaft; this provides the rotational motion to rotate the pulley and hence traverse the belt attached to the pulley.

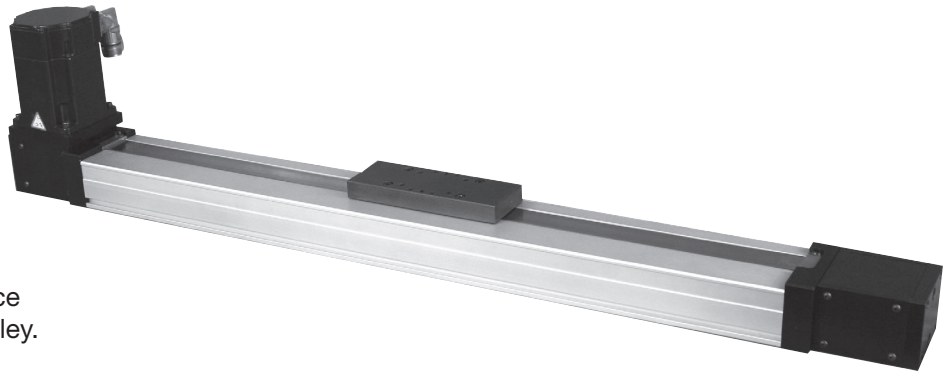

On the opposite end, known as the take-up end, the B27 uses a take-up pulley that works in conjunction with a take-up slide and take-up bearing to provide ample support for the other end of the belt as the motor provides the rotational motion. This rotational motion is transformed into linear motion as the carriage and load attached to the belt traverse along the length of the rodless actuator under direct and defined control of the user.

MATERIALS OF CONSTRUCTION

Body Material:	Aluminum
End Caps:	Aluminum
Belt Cover:	Stainless Steel
Carriage:	Aluminum
Belt:	Steel Reinforced Polyurethane

HOW IT'S USED

APPLICATION IDEAS

- Pick & Place
- Sorting
- Loading
- Stacking
- Insertion
- Clamping
- Parts Transfer
- Labeling
- Machine Tool
- Conveyor

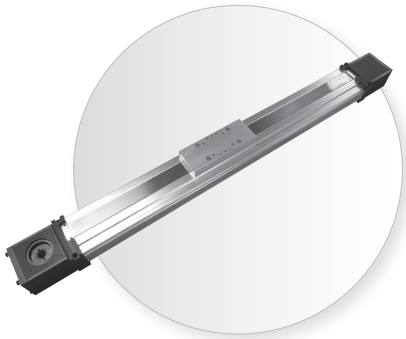

TARGET APPLICATIONS

The B27 is intended for medium-duty industrial applications that require flexible, long distance, high speed motion with ample load and moment loading capacity. When your application calls for up to 3m (~10ft.) of stroke with up to 125 lbs (~556N) and speed capability in the 5m/sec (~200"/sec) range, the B27 offers you all this at an exceptional value.

For applications that call for an alternative solution to a traditional pneumatic application and that offers a more adaptable solution that can grow with your motion needs, Bimba electric actuators provide the interchangeable solution in an easy-to-use, long-lasting, and tough electric actuator that exceeds the competition.

DRIVE OPTIONS

With numerous drive interfaces ranging from a single or double standard shaft input to our integral reducer drive, the choice is yours to select the option that works for you. There are many Bimba stepper and servo motors to choose from, so configuring an electric actuator that best meets the needs of even your most demanding application has never been easier.

ADVANTAGES

FEATURE	ADVANTAGE	BENEFIT
Carriage constructed of high-strength 7075 aluminum	Offers enhanced strength and robustness over the competitor	Less deflection and increased load and moment loading capability per carriage size
Self-lubricating linear guides	Minimized maintenance	Worry- and maintenance-free long life, even in applications that require 24/7 motion
Integral Reducer Drive (optional)	Offers increased performance using embedded gear reducer	Move larger loads and improve inertia matching, using an aesthetically pleasing, cost-effective solution

DIMENSIONS

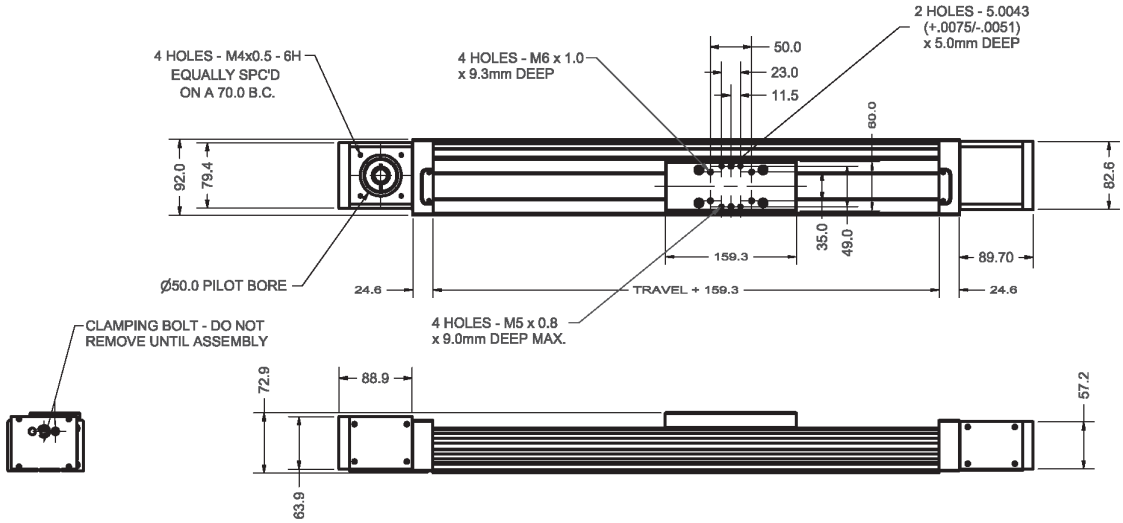

LINEAR ACTUATOR	LEAD CONSTANT (mm/rev.)	EXTRUSION MOMENT OF INERTIA		MAXIMUM INPUT TORQUE NM (in-lbs)	MAXIMUM INPUT DIA. mm (in)	BELT	
		IX (cm^4)	IY (cm^4)			MAXIMUM FORCE N (lbs)	ELASTIC LIMIT N (lbs)
B27	160	162	52.8	11.3 (100)	16 (0.63)	445 (100)	890 (200)

LINEAR ACTUATOR	CARRIAGE LENGTH (mm)	DYNAMIC LOAD CAPACITY N (lbs)	DYNAMIC MOMENT CAPACITY		
			M_R (ROLL) NM (in-lbs)	M_P (PITCH) NM (in-lbs)	M_Y (YAW) NM (in-lbs)
B27	160	2736 (615)	22.5 (199)	34.3 (302)	34.3 (302)

OPERATING RANGES

Temperature ranges for normal operation of actuator components.

Linear Bearings:	5˚ F to 464˚ F (-15˚ C to 240˚ C)
Ball Bearings:	-30˚ C to 250˚ C (-22˚ F to 482˚ F)
Gear Reducers:	-50˚ C to 232˚ C (-58˚ F to 449˚ F)
Belt, Standard:	0˚ C to 80˚ C (32˚ F to 176˚ F)
Belt, Low Temperature:	-25˚ C to 5˚ C (-13˚ F to 41˚ F)
Belt, High Temperature:	20˚ C to 110˚ C (68˚ F to 230˚ F)

MOTORS AND DRIVES

Bimba motors are available to use as the rotary drive mechanism of the B27 Series. With a complete array of stepper and servo motors available in stock, Bimba has a motor*-drive solution that meets many demanding applications.

Configuring your motor and creating your first motion profile program is easier than ever with Bimba's intuitive and icon based IQ® suite of motion software. With our complete software suite available for free download from the Bimba website, there is no additional cost to your motion project. All Bimba stepper and servo programming software uses the same IQ® programming software, greatly reducing the learning curve. Existing programs can be easily shared or adapted among the two motor technologies.

See the Motors and Drive section for Bimba's wide selection of available motors and motor drives.

**Contact Bimba's Customer Service team for help in crossing your motor to a Bimba motor.*

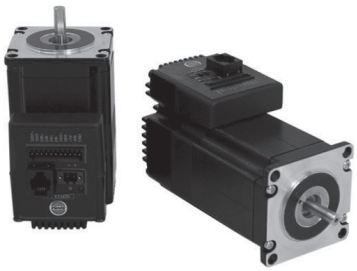

IntelliMotor®
ITM-23Q-2-EIP-E-M12

AC Stepper Motor
MTR-AC23T-753-S

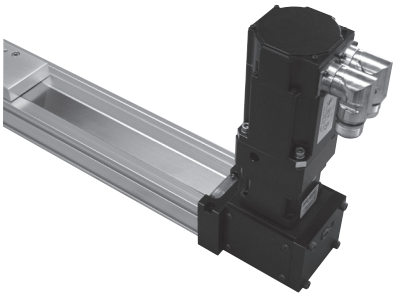

B27 with Servo Motor

REVERSE PARALLEL MOTOR MOUNTS

In cases where space saving is critical, or in which gaining mechanical advantage via a geared drive belt pulley leads to an improved design, Bimba offers reverse parallel motor mounts. They are offered for use with nearly any Bimba motor or customer-provided motor. The option to mount in either the top or bottom position for the B27 actuator adds flexibility.

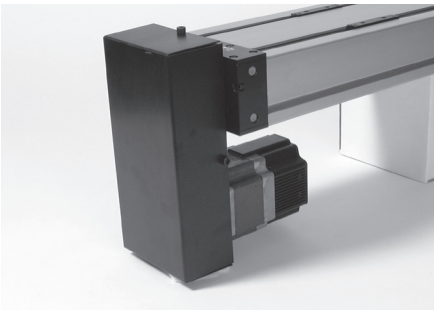

Bimba Reverse Parallel Reduction Mounts

LINEAR SCALE

In extreme cases where precision beyond the normal tight accuracy of the B27 is desired, Bimba offers external linear scales. They are capable of providing extended position precision to as tight as 10µm. These scales are composed of a reading head and external scale. Linear scales are available in incremental or absolute versions which can be added to your actuator as an additional component when included in the final part number.

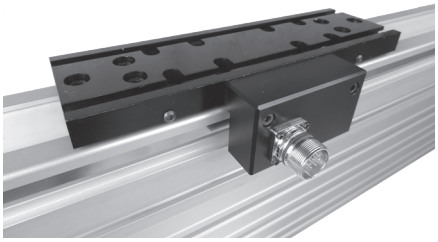

External Linear Scale

MOUNTING CLAMPS

To secure an actuator to the machine frame, hold-down clamps are available. They are designed to fit perfectly in the extruded body actuator T-channel. Appropriate sized clamps are available for B27 actuators, as well as all of Bimba's electric actuators.

Bimba B27 Clamp
CL-27-39

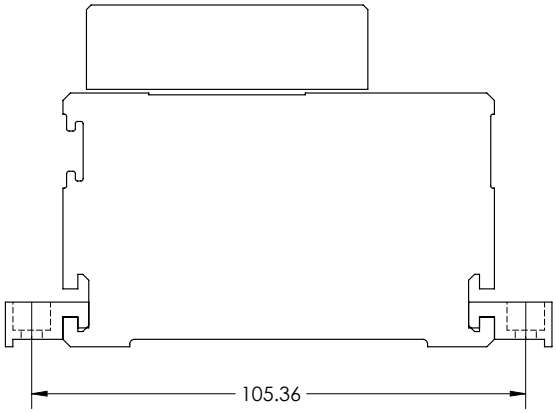

B27 Clamp Drawing

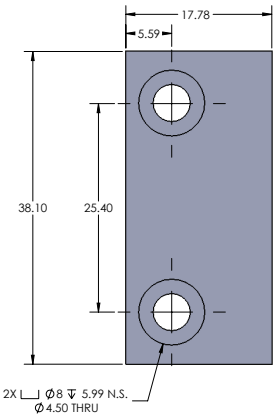

B27 Clamp Drawing

HOW TO ORDER

The model number of the B27 Series rodless actuator consists of an alphanumeric cluster designating product type, stroke length, drive type, drive location, gear ratio (optional), external linear scale (optional), and other optional components that together make up the complete part number to use in ordering. Use the ordering information below to build a valid part number.

An example of a basic B27 unit with 1000mm stroke, a reducer drive, no scale, and additional options is shown below.

DRIVE	
SD	Single Drive
DD	Double Drive
RD	Reducer Drive
EZ	EZ Drive[2]

SCALE*	
N	No Scale
L	Left Hand

DISTANCE
XXXX (mm)
160-1000mm

KEYWAY	
Y	Yes
N	No

CARRIAGE
B

B27 B 01000 RD T 1 N N 0000 00 N P0

ACTUATOR
B27

STROKE
XXXXX (mm)

HAND	
T	Top Hand
B	Bottom Hand

RATIO
XX

EXTRA CARRIAGES	
N	None
1	1 Extra
2	2 Extra

PROTECTION	
00	Standard
Z1	Corrosion-Resistant
SS	Stainless Steel

PURGE PORT[1]	
P0	None
PL	Left
PR	Right
PB	Both

[1] Referenced from drive end with carriage on top.
[2] EZ option standard shaft diameter: 5/8" / 15.875mm

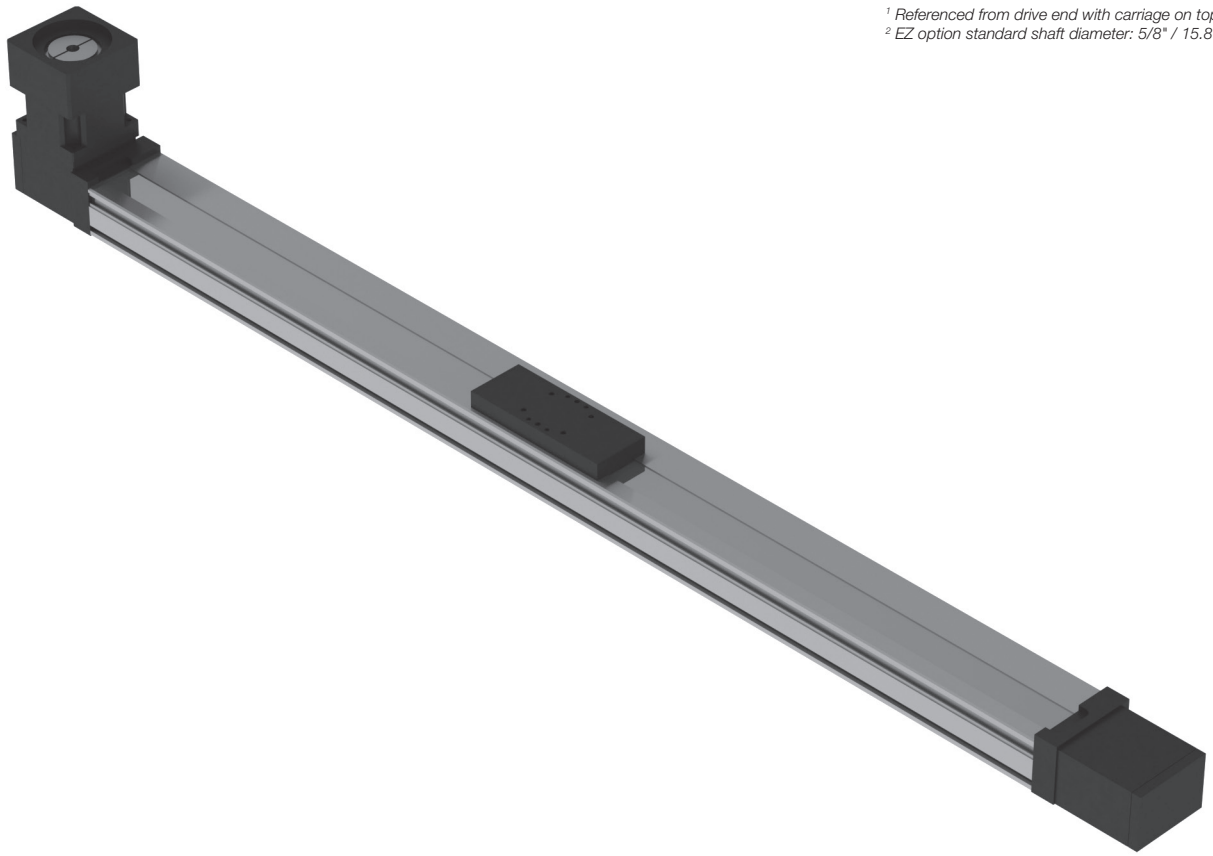

NOTE: If a motor or gearbox adapter is required, please refer to the Adapters section of the Accessories chapter in this catalog.

Bimba B27 Series electric actuators are repairable. A list of the individual components is given below that together make up the B27 electric actuator.

Please use the linear actuator serial number located at the drive end for all inquiries, along with the original purchase order number (if available). Describe the part required along with part number below. Contact Bimba Customer Service at 800-442-4622 (800-44-BIMBA) or e-mail cs@bimba.com.

REPAIR PARTS

QUANTITY	PART NO.	PART DESCRIPTION
1	S27-P02	Top Carriage
1	B27-P03	Bottom Carriage
2	S27-P07	Sealing Strip Roller
1	B27-P01	Extrusion
1	B-27-P07 Rev B	Belt Clamp
1	B27-P10	Drive End Plate
1	B27-P11	Take-up End Plate
1	B27-P12	Drive Belt
1	B27-P13	Drive Pulley
1	B27-P14	Take-up Pulley
2	B27-P15	Take-up Shaft
2	LP15-21	Take-up Bearings
2	B27-P17	Take-up Side Plate
2	B27-P18	Cover Plate
1	B27-P19	End Plate
1	B27-P20	Bearing Plate
1	B27-P21	Drive Shaft

QUANTITY	PART NO.	PART DESCRIPTION
1	B27-P22	Motor Mounting Plate
0	B27-P22-NT23	Motor Mounting Plate for NEMA 23
0	B27-P22-NT60	Motor Mounting Plate for NT60 Reducer
1	B27-P23	Shaft Clamp
2	B27-P24	Drive Cover
1	B27-P25	Drive End Plate
1	LP15-16R	Rail LWE15R
2	LP15-16B	Linear Bearings
1	LP20-25	Drive Bearing
2	LP15B-11	Take-up Slide
1	S27-P09	Seal Strip
2	B27-P30	Magnets
2	S27-P21	Retainer Sealing Strip
2	S27-P22	Bumper
2	B80-42	Magnet
1	B27-27	Retaining Ring
1	AD-LP15B-XT060	Adapter

HOW TO CUSTOMIZE

SWITCHES

Switches add versatility to your electric motion application. They can be used to provide end of stroke limits, count strokes, or communicate positioning to an outside source. Switches can provide safety to applications as well, preventing undesirable situations like runaways to prevent damage.

To learn more about Bimba's available switch selection, refer to the Switches section in this catalog.

AIR/PURGE PORTS

Air and purge ports are essential for actuators that operate in dirty applications. In both belt- and screw-driven actuators, ports keep dust and grime from egressing, protecting the internals of the actuator. Air and purge ports are recommended for use with Bimba's air preparation products.

When using purge ports, supply dry filtered air to the actuators in order to achieve optimal protection.

PROTECTION

Bimba offers several protection options for our actuators. Our primary options are Armoloy® and stainless steel. **Armoloy®** offers additional protection against moisture and dirt. It is used to coat the steel linear rail and bearings in a Bimba actuator. Armoloy® coating can also be applied to the aluminum extrusion upon request. **Stainless steel** works in conjunction with Armoloy® coatings, providing additional protection to the end caps and carriage.

Additional coatings are available upon request.

MOTOR MOUNTING

Motor mounts allow you to mount any motor to any actuator (within the actuator's rating). They give end users the ability to use Bimba electric actuators with the motor of their choosing. Careful considerations regarding torque limitations must be made when mounting a motor the actuator is not rated for.

To request custom motor mounting options, please supply Bimba with the following information: shaft diameter, shaft length, pilot diameter, pilot depth, bolt circle, and hole size.

CUSTOMER-REQUESTED HOLES AND DOWEL PINS

Bimba can provide custom holes and dowel pins to accommodate the customer's specific tooling and mounting holes.

For further customization, contact the factory.