S27 RODLESS ACTUATORS

S27 BALLSCREW RODLESS ACTUATORS

The S27 is Bimba's single rail ballscrew-driven electric linear actuator for use in a variety of industries and applications. The S27 uses a ballscrew to convert motor rotary motion to linear motion. The high-efficiency ballscrew is designed to handle high forces leading to high thrust forces within the linear motion of the actuator. With a single bearing block riding along the carriage ball rail, the S27 offers the highest thrust force per size.

When a belt driven actuator does not offer enough thrust, or when maximizing thrust force in your motion application is paramount, the ballscrew-driven S27 is the obvious choice. From clamping and pressing applications to material handling, the S27 is the starting point when looking for a high thrust motion profile with robust loading capability. Built using only high quality components throughout its construction, the S27 is Bimba's first option when considering a ballscrew-driven electric actuator for general purpose applications.

PRODUCT FEATURES

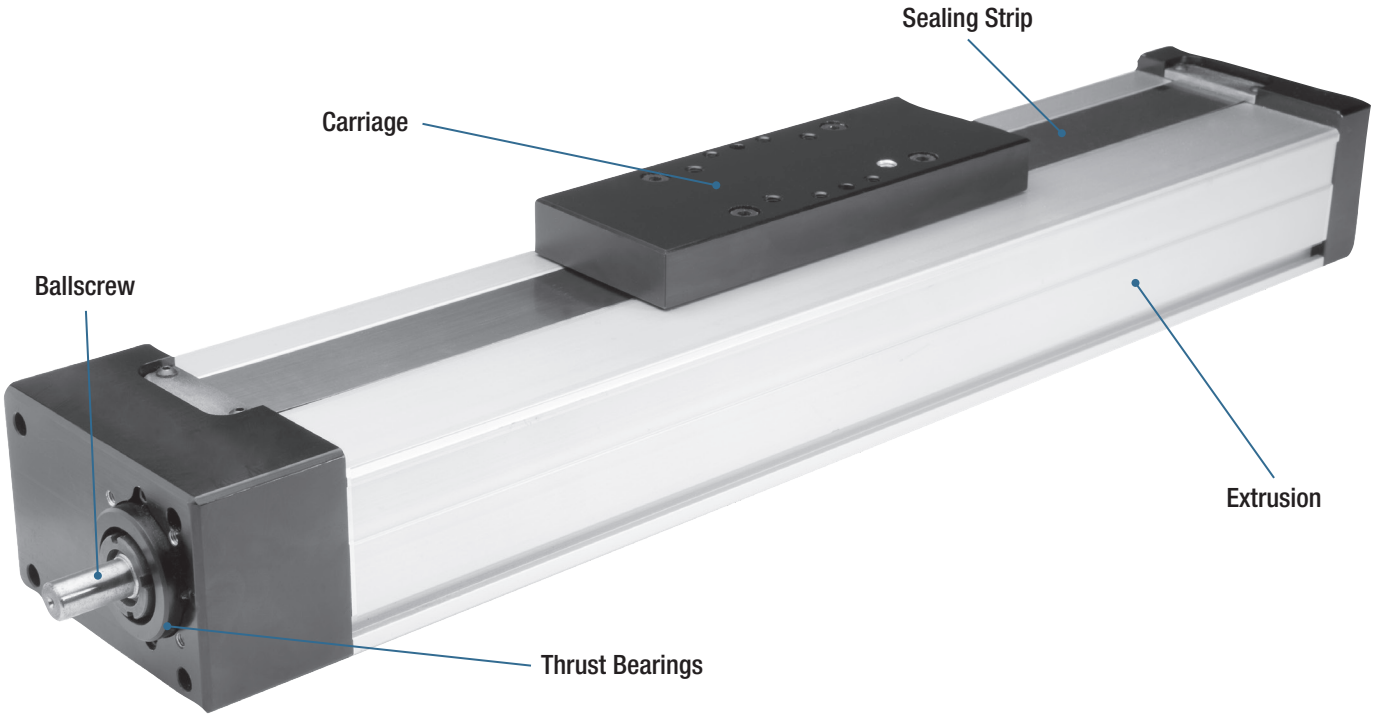

The S27 is the ballscrew version of the B27 belt drive actuator and employs identical extrusion, carriage, and bearing systems, leading to the same high-moment capacities in all mounting directions while delivering about six times more thrust capability. The increased thrust is a direct result of the high-efficiency ballscrew and dual bearing-block design.

FEATURES AND BENEFITS

Precision Rolled Ballscrew:
- Ideal for high thrust applications
- Highest thrust per unit size
- Repeatability to 0.001”
- Several lead pitches available
- Optional leadscrews available

Built-in Linear Ball Rail Guide:
- Maintenance free
- Self-lubricating
- Low friction
- Smooth operation
- Long life expectancy

Low Profile Aluminum Extrusion:
- Provides better fit in tight applications
- Stainless steel seal strip
- Two bearing blocks per rail standard

S27

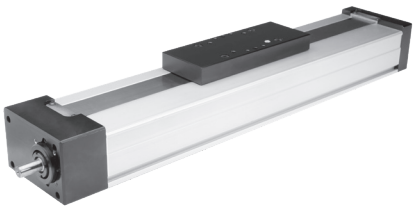

The Bimba S27 rodless actuator is a ballscrew driven linear actuator that takes advantage of the high torque capability and high efficiency (~90%) offered by a ballscrew design. The machined end of the ballscrew is coupled to an external motor shaft to provide the rotary motion. That motion gets converted to linear motion by the integral ballscrew and nut assembly that forms the foundation of the S27. The S27 is assembled using the linear ball rail guide with long-life bearing block and robust extrusion and carrier; it is the first choice when specifying a ballscrew electric actuator.

In addition, the S27 is a perfect choice when building a multi-axis system, as the ample dynamic and moment loading characteristics offer outstanding load support when solving two-axis systems. With transition plates available to couple another Bimba rod, rodless, or rack & pinion actuator to the S27, solving motion applications in two dimensions becomes an easy task.

MATERIALS OF CONSTRUCTION

Body:	Aluminum
End Caps:	Aluminum
Ball Nut Adapter:	Steel
Carriage:	7075 Aluminum
Sealing Strips:	400 Grade Stainless Steel
Ballscrew:	Hardened Steel

HOW IT'S USED

APPLICATION IDEAS

- Pick & Place
- Sorting
- Loading
- Stacking
- Insertion
- Clamping
- Parts Transfer
- Labeling
- Machine Tool
- Conveyor

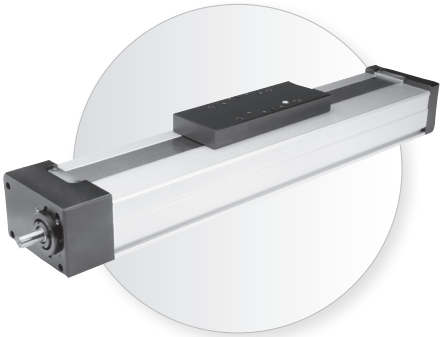

TARGET APPLICATIONS

The S27 is intended for medium-duty industrial applications that require flexible, medium torque motion with plenty of load and moment loading capacity for common loads. When your application calls for up to ~1m (~3.5ft.) of stroke with up to 1750 lbs (~556N) of dynamic loading, and a speed capability in the 0.8m/sec (~32"/sec) range, the S27 offers you unbelievable performance at an exceptional value.

For applications that call for an alternative solution to traditional pneumatics, and that offers a more adaptable solution that can grow as your motion needs change, Bimba ballscrew electric actuators provide the interchangeable solution that adapts alongside your business in an easy-to-use, long-lasting, and tough electric actuator that exceeds the competition.

DRIVE OPTIONS

The S27 offers two drive interfaces to choose from: a single standard inline shaft input or our reverse parallel belt drive in a 1:1, 1.5:1, or 2:1 ratio. The choice is yours to select the option that works best for you. With many Bimba stepper and servo motors available to choose from, configuring an electric actuator that best meets the needs of even your most demanding application has never been easier.

ADVANTAGES

FEATURE	ADVANTAGE	BENEFIT
Carriage constructed of high-strength 7075 aluminum	Offers enhanced strength and robustness over the competitor	Customer realizes less deflection and increased load and moment loading capability per carriage size
Self-lubricating linear guides	Minimized maintenance	Customer can expect worry- and maintenance-free long life, even in applications that require 24/7 motion

DIMENSIONS

Key specification information for the S27 is given below. For additional specification information, contact Bimba Customer Service at cs@bimba.com, or 800.44.BIMBA (800.442.4622).

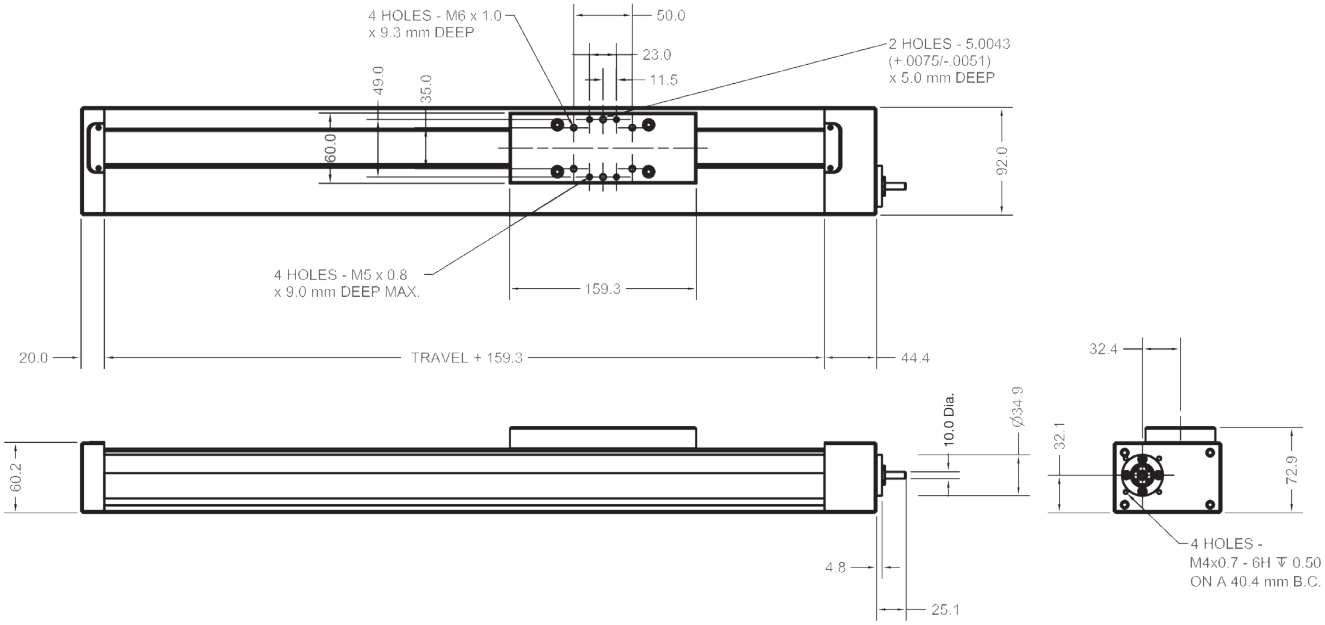

SPECIFICATIONS

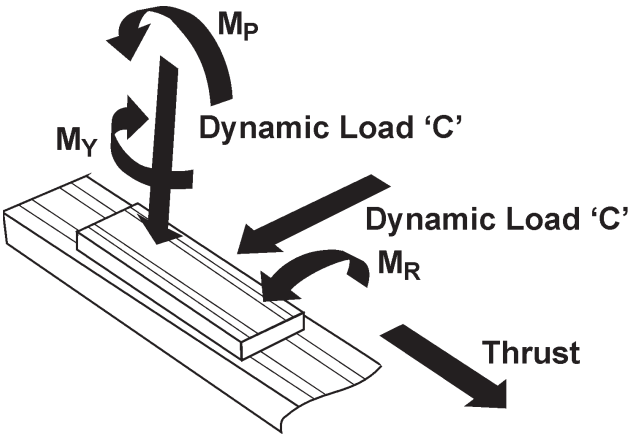

EXTRUSION		
LINEAR ACTUATOR	MOMENT OF INERTIA	
	Ix (cm^4)	Iy (cm^4)
S27	162	52.8

Straightness 0.0125" per foot per length
Twist: 1/4° per foot, 3° maximum per 6mm length

LINEAR ACTUATOR	LEAD CONSTANT (mm/rev.)	END BEARING		SCREW	
		DYNAMIC LOAD N (lbs)	STATIC LOAD N (lbs)	DYNAMIC LOAD N (lbs)	STATIC LOAD N (lbs)
S27	5	12400 (2790)	7650 (1720)	5100 (1146)	10500 (2360)
	10			5100 (1146)	10500 (2360)
	16			4300 (966)	10200 (2293)

LINEAR ACTUATOR	CARRIAGE LENGTH (mm)	DYNAMIC LOAD CAPACITY N (lbs)	DYNAMIC MOMENT CAPACITY		
			ROLL M_R NM (in-lbs)	PITCH M_P NM (in-lbs)	YAW M_Y NM (in-lbs)
S27	160	2736 (615)	22.5 (199)	34.2 (302)	34.2 (302)

Inertia (lb-in-sec^2):

$J = (1.0 + \text{Stroke mm} * 0.001) * 10^4 * 8.85$

Weight:

S27 = 3kgs + (0.01kgs/mm)

MOTORS AND DRIVES

Bimba motors are available to use as the rotary drive mechanism of the S27 Series. With a complete array of stepper and servo motors available in stock, Bimba has a motor*-drive solution that meets many demanding applications.

Configuring your motor and creating your first motion profile program is easier than ever with Bimba's intuitive and icon based IQ® suite of motion software. With our complete software suite available for free download from the Bimba website, there is no additional cost to your motion project. All Bimba stepper and servo programming software uses the same IQ® programming software, greatly reducing the learning curve. Existing programs can be easily shared or adapted among the two motor technologies.

See the Motors and Controls section for Bimba's wide selection of available motors and motor drives.

**Contact Bimba's Customer Service team for help in crossing your motor to a Bimba motor.*

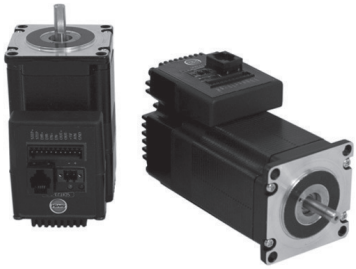

IntelliMotor®
ITM-23Q-2-EIP-E-M12

AC Stepper Motor
MTR-AC23T-753-S

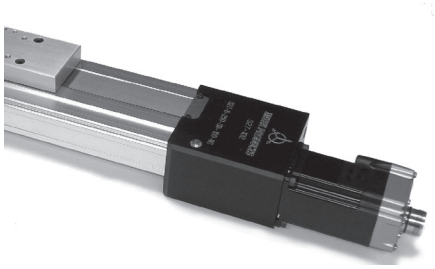

S27 with Servo Motor

REVERSE PARALLEL MOTOR MOUNTS

In cases where space savings are critical, or in which gaining mechanical advantage via a geared drive belt pulley leads to an improved design, Bimba offers reverse parallel motor mounts. They are offered for use with nearly any Bimba motor or customer-provided motor. The option to mount in either the top or bottom position for the S27 actuator adds flexibility.

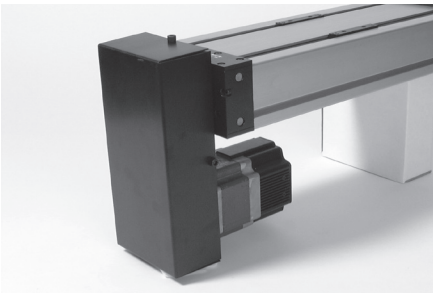

S27 Reverse Parallel Reduction Mounts

LINEAR SCALE

In extreme cases where precision beyond the normal tight accuracy of the S27 is desired, Bimba offers external linear scales. They are capable of providing extended position precision to as tight as 10µm. These scales are composed of a reading head and external scale. Linear scales are available in incremental or absolute versions which can be added to your actuator as an additional component when included in the final part number.

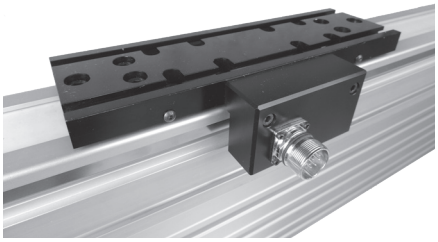

External Linear Scale

MOUNTING CLAMPS

To secure an actuator to the machine frame, hold-down clamps are available. They are designed to fit perfectly in the extruded body actuator T-channel. Appropriate sized clamps are available for the S27 actuator, as well as all of Bimba's electric actuators.

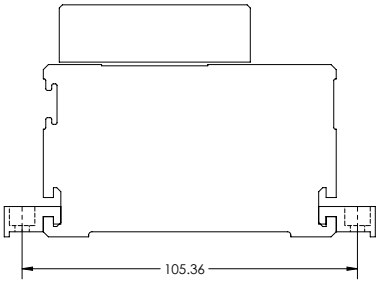

Bimba S27 Clamp
CL-27-39

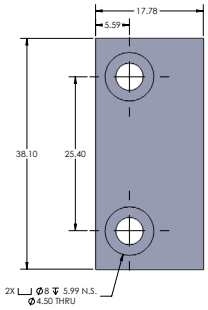

S27 Clamp Drawing

The model numbers of the S27 Series rodless actuator consist of an alphanumeric cluster designating product type, stroke length, drive type, drive location, gear ratio (optional), external scale (optional), and other optional components that together make up the complete part number to use in ordering. Use the ordering information below to build a valid part number.

An example of a basic S27 unit with a 160mm ‘B’ carriage, 500mm stroke, standard drive, 5mm lead, no external scale, one extra carriage with a distance of 590mm, standard protection, no keyway, and additional options is shown below.

CARRIAGE
B

DRIVE	
SD	Standard Drive

SCALE*	
N	No Scale
L	Left
R	Right

DISTANCE
XXXX (mm)
160-1290mm

KEYWAY	
Y	Yes
N	No

S27 B 0500 SD 05 N 1 0590 00 N P0

ACTUATOR
S27

STROKE
XXXX (mm)
50-1050mm

LEAD	
05	5mm lead
10	10mm lead
16	16mm lead

EXTRA CARRIAGES	
N	None
1	1 Extra
2	2 Extra

PROTECTION	
00	Standard
Z1	Corrosion-Resistant
SS	Stainless Steel

PURGE PORT*	
P0	None
PL	Left
PR	Right
PB	Both

** Referenced from drive end with carriage on top.*

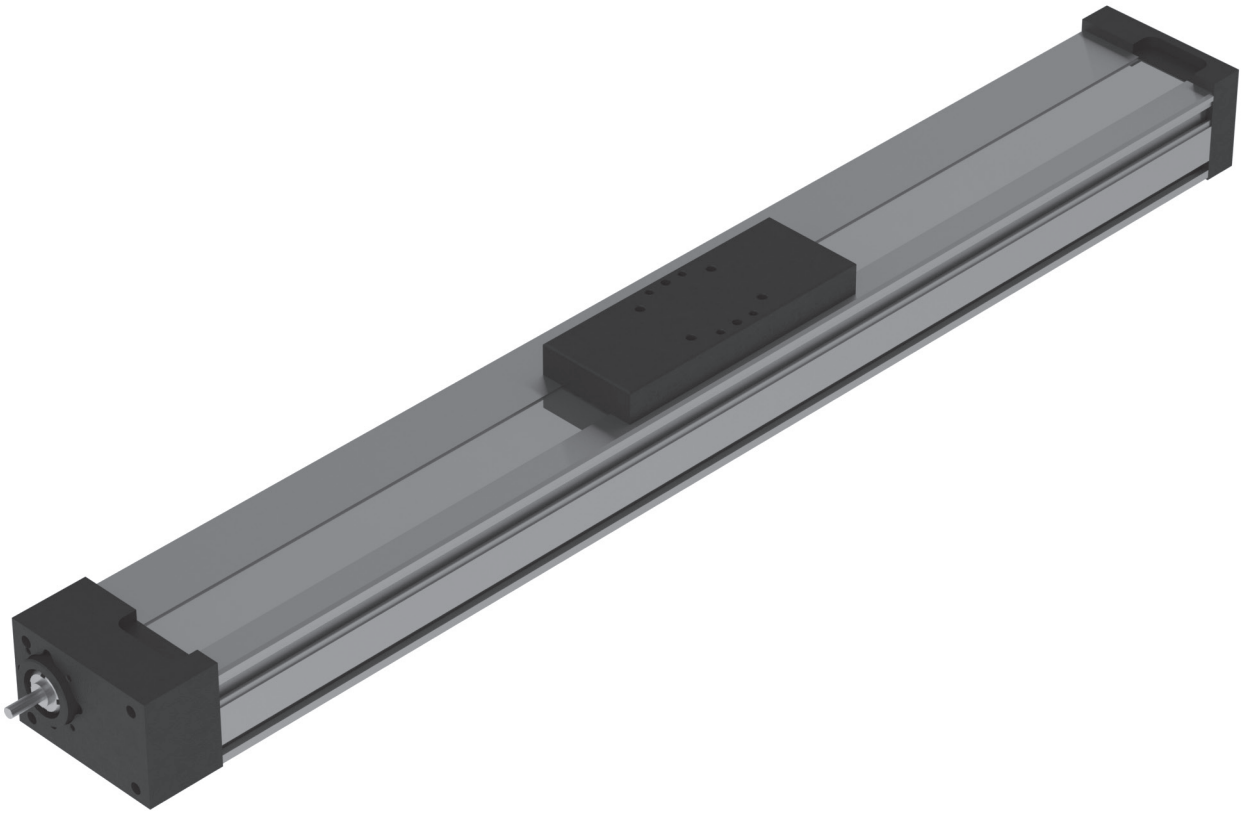

NOTE: If a motor or gearbox adapter is required, please refer to the Adapters section of the Accessories chapter in this catalog.

HOW TO REPAIR

Bimba S27 Series ballscrew rodless electric actuators are repairable. A list of the individual components is given below that together make up the S27 electric actuator.

Please use the linear actuator serial number located at the drive end for all inquiries, along with the original purchase order number (if available). Describe the part required along with part number below. Contact Bimba Customer Service at 800-442-4622 (800-44-BIMBA) or e-mail cs@bimba.com.

S27 STANDARD DRIVE (16 MM)

QUANTITY	PART NO.	PART DESCRIPTION
1	S27-P02	Top Carriage
1	S27-P103	Bottom Carriage
2	S27-P07	Sealing Strip Roller
1	B27-P01	Extrusion
1	LP15-16R	Rail
2	LP15-16B	Linear Bearings
1	S27-P09	Seal Strip
2	B27-P30	Magnets
1	B27-P26-A	Magnet Holder
2	S27-P21	Retainer Sealing Strip
2	S27-P22	Bumper
1	S27-P115-SD	Drive End Plate
1	S27-P116	Ball Nut Adapter
1	S27-P117	Support End Plate
1	S27-P118	Drive Retainer
1	LP15-16-05	Ballscrew
1	LP15-16-05N	Ball Nut
2	LP15-32	Bearing Thrust
1	LP15-21	Bearing Support
1	LP15-34	Lock Nut

SWITCHES

Switches add versatility to your electric motion application. They can be used to provide end of stroke limits, count strokes, or communicate positioning to an outside source. Switches can provide safety to applications as well, preventing undesirable situations like runaways to prevent damage.

To learn more about Bimba's available switch selection, refer to the Switches section in this catalog.

AIR/PURGE PORTS

Air and purge ports are essential for actuators that operate in dirty applications. In both belt- and screw-driven actuators, ports keep dust and grime from egressing, protecting the internals of the actuator. Air and purge ports are recommended for use with Bimba's air preparation products.

When using purge ports, supply dry filtered air to the actuators in order to achieve optimal protection.

PROTECTION

Bimba offers several protection options for our actuators. Our primary options are Armoloy® and stainless steel. **Armoloy®** offers additional protection against moisture and dirt. It is used to coat the steel linear rail and bearings in a Bimba actuator. Armoloy® coating can also be applied to the aluminum extrusion upon request. **Stainless steel** works in conjunction with Armoloy® coatings, providing additional protection to the end caps and carriage.

Additional coatings are available upon request.

MOTOR MOUNTING

Motor mounts allow you to mount any motor to any actuator (within the actuator's rating). They give end users the ability to use Bimba electric actuators with the motor of their choosing. Careful considerations regarding torque limitations must be made when mounting a motor the actuator is not rated for.

To request custom motor mounting options, please supply Bimba with the following information: shaft diameter, shaft length, pilot diameter, pilot depth, bolt circle, and hole size.

CUSTOMER-REQUESTED HOLES AND DOWEL PINS

Bimba can provide custom holes and dowel pins to accommodate the customer's specific tooling and mounting holes.

For further customization, contact the factory.

NOTES