Jarret Shock Absorbers
BC5 Series

BC5A → BC5E Series

Technical Data

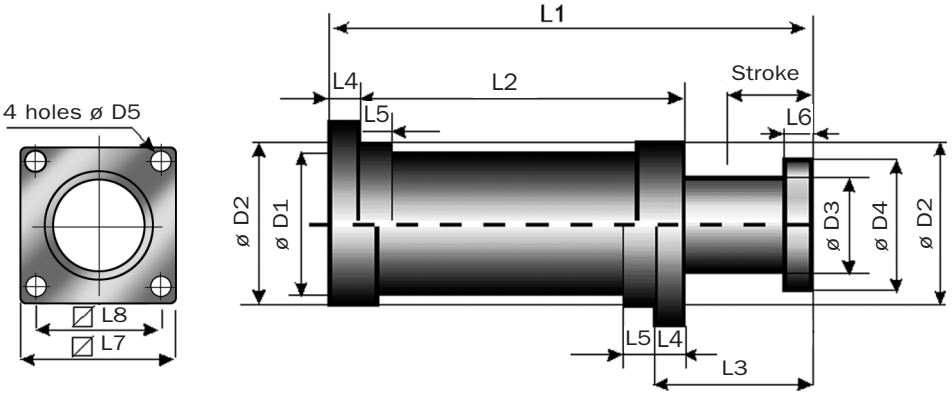

Rear Flange Mount - Fa **Front Flange Mount - Fc**

Catalog No./ Model	Max Energy Capacity in-lbs. (kJ)	Stroke in. (mm)	Return Force Extension lbs. (kN)	Return Force Compression lbs. (kN)	Rdy_0 lbs. (kN)	Rdymax Max Shock Force lbs. (kN)
BC5A-105	221,268 (25)	4.1 (105)	4,159 (18,5)	31,630 (140,7)	37,543 (167)	69,691 (310)
BC5B-130	442,537 (50)	4.7 (120)	13,039 (58,0)	58,416 (259,9)	69,691 (310)	121,397 (540)
BC5C-140	663,806 (75)	5.5 (140)	11,015 (49,0)	73,827 (328,4)	89,924 (400)	157,366 (700)
BC5D-160	885,075 (100)	6.3 (160)	13,376 (59,5)	85,427 (380,0)	105,660 (470)	184,343 (820)
BC5E-180	1,327,612 (150)	7.1 (180)	26,269 (117,0)	122,656 (546)	143,878 (640)	247,290 (1 100)

Catalog No./ Model	L1 in. (mm)	L2 in. (mm)	L3 in. (mm)	L4 in. (mm)	L5 in. (mm)	L6 in. (mm)	L7 in. (mm)	L8 in. (mm)	D1 in. (mm)	D2 in. (mm)	D3 in. (mm)	D4 in. (mm)	D5 in. (mm)	Weight lbs. (kg)
BC5A-105	16.3 (415)	10.8 (275)	5.5 (140)	0.79 (20)	1.2 (30)	0.59 (15)	5.3 (135)	4.1 (105)	4.6 (116)	4.6 (116)	3.4 (87)	4.7 (120)	0.55 (14)	55 (25)
BC5B-130	19.7 (500)	12.8 (325)	6.9 (175)	1.0 (25)	1.3 (33)	1.2 (30)	6.1 (155)	4.9 (125)	5.6 (142)	5.6 (142)	4.5 (115)	5.4 (138)	0.55 (14)	88 (40)
BC5C-140	20.5 (520)	12.4 (315)	8.1 (205)	1.2 (30)	1.4 (36)	1.4 (35)	6.9 (175)	5.5 (140)	6.3 (160)	6.3 (160)	5.2 (132)	6.2 (158)	0.70 (18)	99 (45)
BC5D-160	23 (585)	13.8 (350)	9.3 (235)	1.4 (35)	1.6 (40)	1.6 (40)	8.5 (215)	6.7 (170)	7.1 (180)	7.1 (180)	6.0 (153)	7.3 (185)	0.87 (22)	161 (73)
BC5E-180	26.4 (670)	15.9 (405)	10.4 (265)	1.6 (40)	1.8 (45)	1.8 (45)	9.8 (250)	7.7 (195)	8.5 (215)	8.5 (215)	7.2 (182)	8.7 (220)	1.0 (26)	258 (117)

Impact Speed: BC5 Series shock absorbers are designed for impact velocities of up to 4 m/sec. Higher impact velocities require custom modification.
Spring and shock absorber products are capable of functioning between 15°F and 160°F (-10°C and + 70°C). However, standard products are not intended for use over the full rated temperature range.
Consult factory for special product considerations required to accommodate operation over a wide temperature range.

Based On

- ☐ Impact velocity (V) : 2 m/s
- ☐ Operating temperature : 20° to + 40°C
- ☐ Surface protection : Electrolytic zinc
- ☐ Dynamic performance diagram

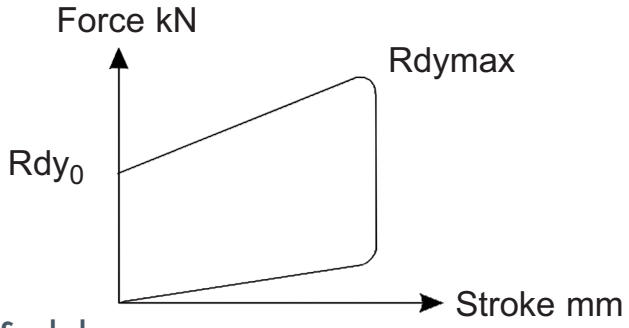

Symbols:

En = Energy Capacity (kJ)
C = Maximum Stroke (mm)
Rdy = Dynamic Reaction Force (kN)

1 - Energy Calculation

$$E = \frac{1}{2} M_e V_e^2$$

2 - Allowable Impact Frequency (IF)

$$IF < 15 \times \frac{En}{E} \text{ Impacts/hour}$$

3 - Effective Stroke Calculation

$$Ce = C \left(\sqrt{\frac{E}{En\,(0{,}03\,V + 0{,}24)}} + 1{,}36 - 1{,}17 \right)$$

4 - Calculation of Effective Reaction Rdy_e

$$Rdy_e = \left[\left(\frac{Rdymax - Rdy_0}{C} \right) \times Ce + Rdy_0 \right] (0{,}1V + 0{,}8)$$

5 - Application Example

Data: Two shock absorbers in series, Effective mass m =300 t, Impact speed v = 1,2 m/s (which is an impact of 0,6 m/s on each shock absorber), Impact frequency = 15 impacts/hour, Maximum allowable structural load 1000 kN

1: $E = \frac{1}{2} \left(\frac{1}{2} mV^2 \right)$

$E = \frac{1}{2} \left(\frac{1}{2} 300 \times 1{,}2^2 \right) = 108$ kJ

2. Selection BC5E-180

3. Maximum allowable impact frequency is $15 \times \frac{150}{108}$ 21 impacts/hour. Therefore 15 impacts/hour is acceptable.

$$15 < 15 \times \frac{150}{108}$$
$$15 < 21$$

4. Effective (actual) stroke is 167 mm

$$Ce = 180 \times \left(\sqrt{\frac{108}{150\,(0{,}03 \times 0.6 + 0{,}24)}} + 1{,}36 - 1{,}17 \right) = 156 \text{ mm}$$

5. $Rdye = \left[(1\,100 - 640) \times \frac{156}{180} + 640 \right] (0{,}1 \times 0{,}6 + 0{,}8)$

Rdye = 893 kN < 1000 kN

6. Compare standards to results:

	BC5E-180		APPLICATION
E (kJ) =	150	>	108
IF =	21	>	15
C (mm) =	180	>	156
Rdymax (kN)	1100	>	893

Note: maximum allowed structural load is 1 000 kN > 893 kN

All performance characteristics can be modified. Please advise us of your specific requirements.