Heavy Duty Shock Absorbers
HDN, HDA Series

Overview

Enidine Heavy Duty Series large-bore hydraulic shock absorbers protect equipment from large impacts in applications such as automated storage and retrieval systems, as well as overhead bridge and trolley cranes. They are available in a wide variety of stroke lengths and damping characteristics to increase equipment life and meet stringent deceleration requirements.

HDN Series

Custom-orificed design accommodates specified damping requirements. Computer generated output performance simulation is used to optimize the orifice configuration. Available in standard bore dimensions of up to 4 in. (100mm) and strokes over 60 in. (1524mm).

HDA Series

Adjustable units enable the user to modify shock absorber resistance to accommodate load velocity variations, with strokes up to 12in. (305mm). Standard adjustable configurations available.

HDN Series

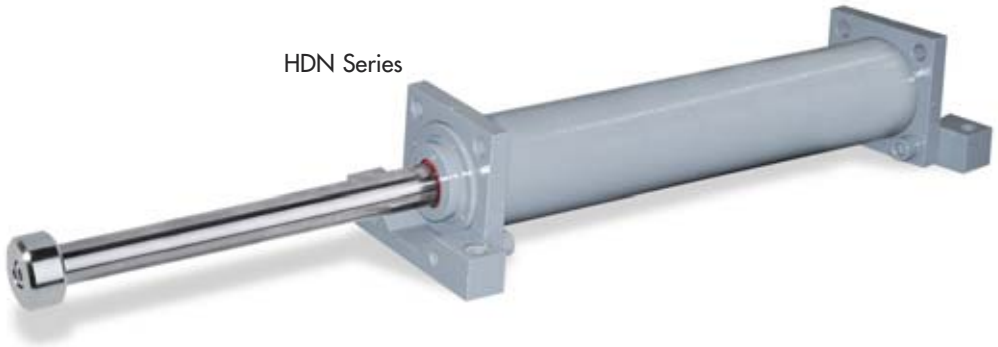

Features and Benefits HDN, HDA

- Designed with Environmentally friendly materials and fluids
- Compact design smoothly and safely decelerates large energy capacity loads up to 3,000,000 in-lbs. per cycle (330 000 Nm)
- Internal charged air/oil accumulator replaces mechanical return springs, providing shorter overall length and reduced weight. **Optional** Bladder Accumulator (BA) for higher cycle rates also available.
- Engineered to meet OSHA, AISE, CMAA and other safety specifications such as DIN and FEM.
- Wide variety of optional configurations including bellows, clevis mounts and safety cables.
- Painted external components provide excellent corrosion protection.
- Epoxy painting and special rod materials are available for use in highly corrosive environments.
- All sizes are fully field repairable.
- Piston rod extension sensor systems available for re-use safety requirements.
- Incorporating optional fluids and seal packages can expand standard operating temperature range from 15°F to 140°F (-10°C to 60°C) to -30°F to 210°F (-35°C to 100°C)

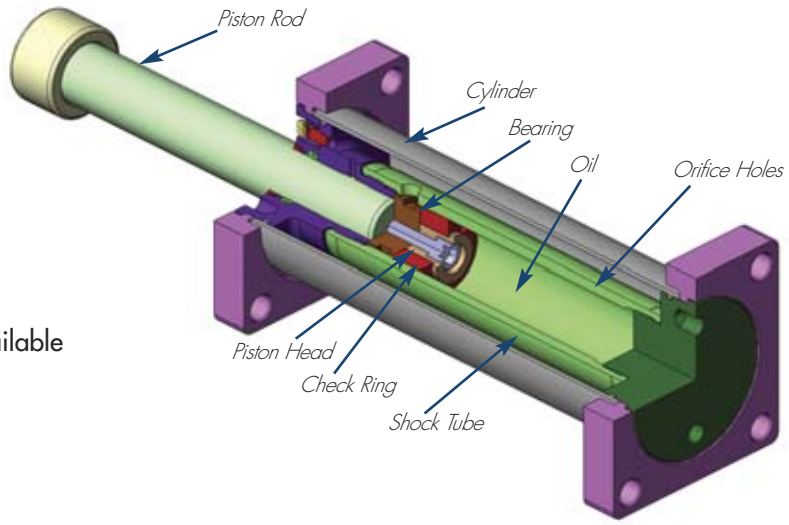

HDN 1.5 x 2 → HDN 1.5 x 32 Series

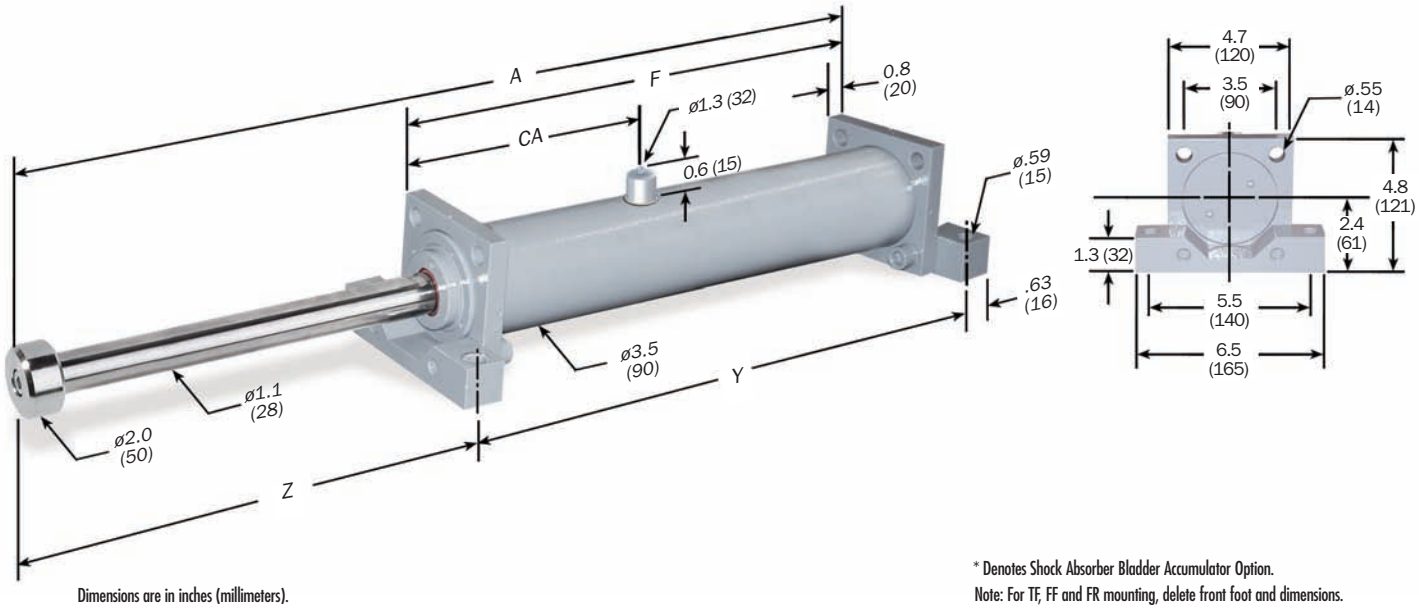

Dimensions are in inches (millimeters).

* Denotes Shock Absorber Bladder Accumulator Option.

Note: For TF, FF and FR mounting, delete front foot and dimensions.

Catalog No./ Model	(S) Stroke in. (mm)	(E_T) Max. in.-lbs./cycle (Nm/cycle)	(E_TC) Max. in.-lbs./hour (Nm/hr)	(F_P) Max. Shock Force lbs. (N)	Nominal Return Force BA* lbs. (N)	Nominal Return Force w/o BA* lbs. (N)	A in. (mm)	F in. (mm)	Y in. (mm)	Z in. (mm)	CA BA* in. (mm)	CA w/o BA* in. (mm)	Model Weight lbs. (Kg)
HDN 1.5 x 2	2 (50)	27,900 (3 200)	1,676,000 (189 000)	15,750 (70 060)	50 (220)	70 (320)	12.2 (310)	8.2 (208)	9.4 (240)	3.4 (86)	5.5 (139)	1.6 (41)	22 (10)
HDN 1.5 x 4	4 (100)	54,200 (6 100)	3,257,300 (368 000)	15,750 (70 060)	50 (220)	90 (410)	16.1 (410)	10.2 (258)	11.4 (290)	5.4 (136)	5.5 (139)	1.6 (41)	24 (12)
HDN 1.5 x 6	6 (150)	80,600 (9 100)	4,838,500 (546 700)	15,750 (70 060)	50 (220)	100 (450)	20.1 (510)	12.1 (308)	13.4 (340)	7.3 (186)	5.5 (139)	1.6 (41)	26 (12)
HDN 1.5 x 8	8 (200)	108,000 (12 200)	6,482,900 (732 500)	15,750 (70 060)	50 (220)	120 (525)	24.1 (613)	14.2 (360)	15.4 (392)	9.3 (237)	5.5 (139)	1.6 (41)	29 (13)
HDN 1.5 x 10	10 (250)	134,900 (15 200)	6,912,000 (781 000)	15,750 (70 060)	50 (220)	135 (600)	28.2 (715)	16.2 (411)	17.4 (443)	11.3 (288)	5.5 (139)	1.6 (41)	31 (14)
HDN 1.5 x 12	12 (300)	161,800 (18 300)	7,769,700 (877,900)	15,750 (70 060)	50 (220)	210 (920)	32.2 (817)	18.2 (462)	19.4 (494)	13.3 (339)	5.5 (139)	1.6 (41)	35 (16)
HDN 1.5 x 14	14 (350)	185,100 (20 900)	8,610,500 (972,900)	15,750 (70 060)	50 (220)	250 (1 120)	36.1 (918)	20.2 (512)	21.4 (544)	15.4 (390)	5.5 (139)	1.6 (41)	37 (17)
HDN 1.5 x 16	16 (400)	208,300 (23 300)	9,468,200 (1 069 800)	13,500 (60 060)	50 (220)	250 (1 120)	40.1 (1 019)	22.2 (563)	23.4 (595)	17.3 (440)	5.5 (139)	1.6 (41)	40 (18)
HDN 1.5 x 18	18 (450)	224,300 (25 300)	10,325,900 (1 166 700)	10,750 (47 820)	50 (220)	250 (1 120)	44.1 (1 121)	24.2 (614)	25.4 (646)	19.3 (491)	5.5 (139)	1.6 (41)	42 (19)
HDN 1.5 x 20	20 (500)	240,300 (27 200)	11,183,600 (1 263 600)	8,750 (38 920)	50 (220)	250 (1 120)	48.2 (1 223)	26.2 (665)	27.4 (697)	21.4 (542)	5.5 (139)	1.6 (41)	44 (20)
HDN 1.5 x 24	24 (600)	269,600 (30 500)	12,899,000 (1 457 400)	6,250 (27 800)	50 (220)	250 (1 120)	56.2 (1 427)	30.2 (767)	31.5 (799)	21.3 (644)	5.5 (139)	1.6 (41)	50 (23)
HDN 1.5 x 28	28 (713)	297,000 (33 600)	14,597,600 (1 649 300)	4,750 (21,130)	50 (220)	250 (1 120)	64.1 (1 629)	34.2 (868)	35.4 (900)	29.3 (745)	5.5 (139)	1.6 (41)	44 (20)
HDN 1.5 x 32	32 (813)	322,800 (36 500)	16,279,300 (1 839 300)	3,700 (16 460)	50 (220)	250 (1 120)	72.0 (1 830)	38.1 (968)	39.4 (1 000)	33.3 (846)	5.5 (139)	1.6 (41)	50 (23)

Notes: 1. HDN shock absorbers will function satisfactorily at 5% of their maximum rated energy per cycle. If less than these values, a smaller model should be specified.
2. It is recommended that the customer consult Enidine for safety-related overhead crane applications.
3. The energy data listed is for ideal linear impacts only. If side load conditions exist in the application, contact Enidine for sizing assistance.
4. Rear flange mounting of 12 inch (300 mm) strokes and longer not recommended. Front and rear flange or foot mount configurations are recommended.
5. Maximum cycle rate is 60 cycles/hr. for HDN with BA option and 30 cycles/hr. without BA option.
6. For impact velocities over 180 in./sec. (4.5 m/s), consult factory.