W74D

Excelon 74 Desiccant Compressed Air Dryer
1/4", 3/8", and 1/2" Port Sizes

- **Excelon Quikclamp™ design provides in-line or modular installation with 72, 73 and 74 Series products.**
- **Helps eliminate condensate at point-of-use.**
- **Replaceable element filters outlet air to help prevent desiccant dust migration down stream.**
- **Desiccant color changes from blue to pink when desiccant replacement is needed.**
- **Transparent or metal bowl available. On models with metal bowl, moisture indicator on top of body indicates condition of desiccant.**
- **Desiccant can be dried and reused or replaced with new packet.**
- **Typical dew point supression of 15°F (-10°C) below inlet ambient pressure dew point.**

Ordering Information. Models listed include PTF threads and a closed bottom bowl.

Port Size	Bowl	Model	Weight lb (kg)
3/8"	Transparent, 7 fluid ounce (0.2 liter)	W74D-3AN-NPN	2.00 (0.91)
1/2"	Transparent, 7 fluid ounce (0.2 liter)	W74D-4AN-NPN	2.00 (0.91)
1/2"	Metal, 1 quart (1 liter)	W74D-4AD-NMN	4.25 (1.93)

Alternative Models

W 7 4 D - ★ ★ ★ - ★ ★ ★

Port Size	Substitute
1/4"	2
3/8"	3
1/2"	4

Threads	Substitute
PTF	A
ISO Rc taper	B
ISO G parallel	G

Moisture Indicator *	Substitute
No indicator	N
With indicator	D

Flow	Substitute
Not applicable	N

Bowl	Substitute
1 quart (1 liter) metal	M
7 fluid ounce (0.2 liter) transparent with guard	P

Drain	Substitute
Closed bottom (no drain)	N

* Moisture indicator used only with dryers equipped with metal bowl.

ISO Symbols

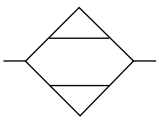

Excelon 74 Desiccant Compressed Air Dryer

All Dimensions in Inches (mm)

Technical Data

Fluid: Compressed air
Maximum pressure
  Transparent bowl: 150 psig (10 bar)
  Metal bowl: 250 psig (17 bar)
Operating temperature*
  Transparent bowl: 0° to 125°F (-20° to 50°C)
  Metal bowl: 0° to 175°F (-20° to 80°C)
* Air supply must be dry enough to avoid ice formation at temperatures below 35°F(2°C).
Nominal bowl capacity
  Transparent: 0.25 pounds (0.11 kg) desiccant
  Metal: 1.25 pounds (0.57 kg) desiccant
Maximum allowable air flow:
  7oz transparent bowl 10 scfm (4.72 dm^3/g)
  1 quart metal bowl 20 scfm (9.49 dm^3/g)
Nominal air drying capacity at 100 psig (6.9 bar) inlet pressure and 77°F (25°C)
  Transparent bowl: 750 cubic feet (21 cubic meters)
  Metal bowl: 6000 cubic feet (170 cubic meters)
Required prefilters: General purpose filter with 5-micron element and an oil removal filter with equivalent pipe size and flow capacity equal to or greater than the desiccant dryer.
Desiccant regeneration: Desiccant can be dried and reused by removing from dryer and heating to 275°F (135°C). Regeneration is complete when desiccant returns to original blue color.
Moisture indicator leakage on models with metal bowl: Air continuously passes thru the moisture indicator and escapes to atmosphere. This is normal and does not indicate a faulty indicator.
Materials
  Body: Aluminum
  Bowl
    Transparent: Polycarbonate with steel bowl guard
    Metal: Aluminum
  Supply tube assembly: Aluminum/stainless steel screen
  Desiccant drying agent: Silica gel
  Filter element: Sintered polypropylene
  Elastomers: Neoprene and Nitrile
  Moisture indicator materials - used only with 1 quart (1 liter) metal bowl
    Body: Transparent nylon
    Test paper: Cobalt chloride
    Elastomers: Nitrile

Service Kits

Item	Type	Part Number
Service kit	Seal and filter element	4385-710
Desiccant	5 bags desiccant, 0.25 lb (0.11 kg) in each bag	4385-700

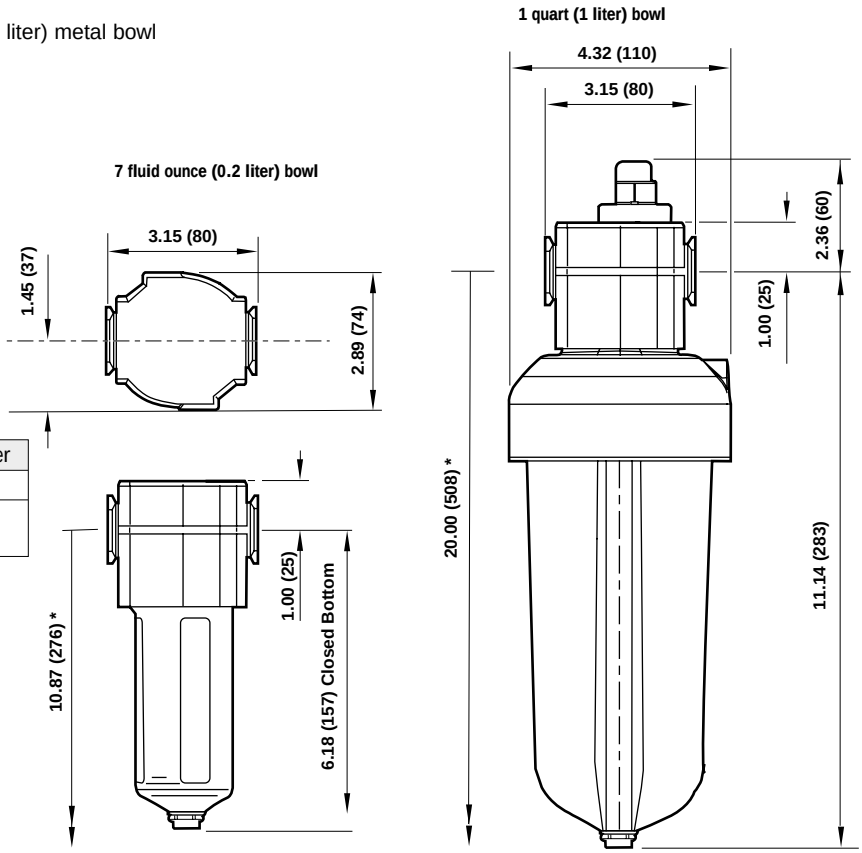

*** Minimum clearance required to remove bowl.**