TAS Series
Heavy Duty
Industrial Pneumatic
1.50″ to 8.00″ Bore

Single Rod End Page 102

Double Rod End Page 120

95% OF OUR CYLINDERS SHIP IN 2-3 DAYS!
ONE DAY RUSH SERVICE AVAILABLE ON ALL CATALOGED CYLINDER MODELS!

SERIES 'TAS' (NFPA) CYLINDER

Floating Rod Bushing

SELF ALIGNMENT FEATURE
Rod Bushing is designed to float .002″ to improve bearing surface alignment.

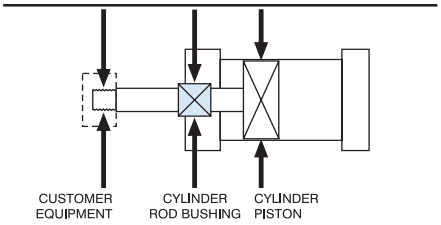

- ***Reduces cylinder drag and erratic operation***
- ***Reduces cylinder wear***
- ***Provides a minimum of 25% longer life than fixed rod bushing designs***

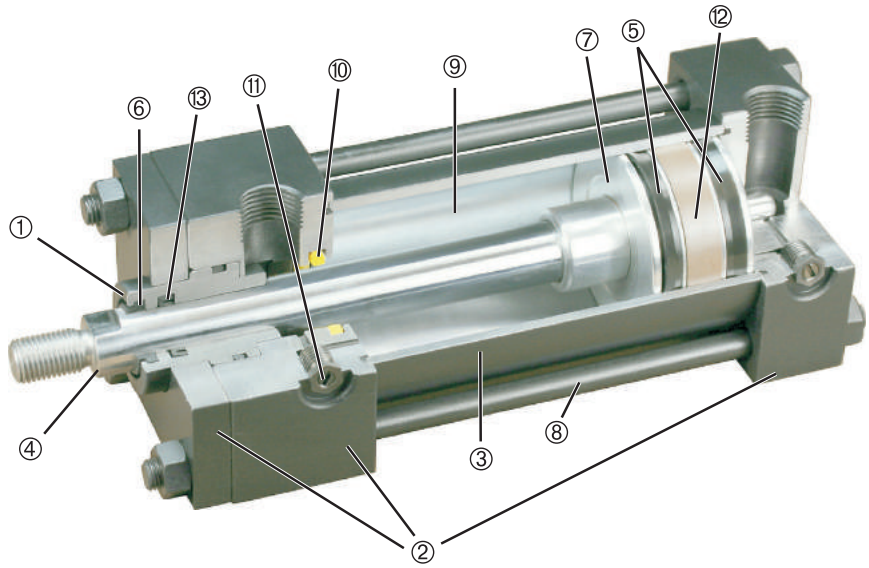

HEAVY-DUTY DESIGN FOR RELIABLE, CONSISTENT OPERATION

① ***FLOATING ROD BUSHING*** – Precision machined from 150,000 PSI rated graphite filled cast iron and PTFE coated to reduce friction and extend cycle life. Bushing design traps lubrication in effective bearing area.

② ***HEAD, CAP & RETAINER*** – Precision machined steel head, cap and retainer are held to close tolerances and ensure accurate alignment for a truly square cylinder.

③ ***CYLINDER TUBE*** – Precision machined steel tube with hard chrome I.D., is honed and micro finished for extended seal life and improved cycle rates.

④ ***PISTON ROD*** – Precision machined from high yield, polished and hard chrome plated steel.

⑤ ***PISTON SEALS*** – Heavy lip design Carboxilated Nitrile construction. Seals are pressure activated and wear compensating for extended life.

⑥ ***ROD WIPER*** – Urethane construction on 3.5″ rod and under. Flocked Nitrile construction on the other rod diameters. External lip design prevents debris from entering cylinder.

⑦ ***PISTON*** – Precision machined from 6061-T651 alloy aluminum, provides an excellent bearing surface for extended cylinder life.

⑧ ***TIE RODS*** – Pre-stressed high carbon steel tie rod construction eliminates axial loading of cylinder tube and maintains compression on tube and end seals.

⑨ ***PERMANENT LUBRICATION*** – Permanently lubricated with Magnalube-G PTFE based grease on all internal components. This is a non-migratory type high performance grease providing outstanding service life. No additional lubrication is required.

⑩ ***CUSHIONS*** – (Options H & C) Floating cushion seal designed for maximum cushion performance, quick return stroke break-away and extended life.

⑪ ***CUSHION ADJUSTMENT NEEDLE*** – Adjustable steel needle design has fine thread metering and is positively captured to prevent needle ejection during adjustment.

⑫ ***WEAR BAND*** – 90% Virgin PTFE and 10% Polyphenylene Sulfide material provides extended life due to extremely low wear factor.

⑬ ***ROD SEAL*** – Carboxilated Nitrile construction on 3.5″ rod and under. Polyurethane construction on the other rod diameters. Both seals are pressure activated and wear compensating for extended life.

FINISH – Black urethane paint.

OPERATING PRESSURE	250 PSI (17 BAR)

OPERATING TEMPERATURE	Standard Seals: -20°F to 200°F (-29°C to 93°C) Fluorocarbon: 0°F to 400°F (-18°C to 204°C)

Performance Options:

- ***ST*** – Stop tubes are used to reduce rod bearing and piston stress (refer to page 141 for cylinder design guidance).
- ***MA*** – Micro-adjust provides a precision adjustment on the cylinder extend stroke, providing quick and accurate cylinder positioning, reducing set-up time.
- ***SSA*** – Stainless steel piston rod, tie rods, nuts and fasteners provide corrosion resistance. Refer to Series 'SS' for a complete stainless steel solution.
- ***LF*** – Low friction seals reduce breakaway and running friction. Effective at all operating pressures.

HOW TO ORDER: SERIES 'TAS' (HEAVY-DUTY STEEL CYLINDERS)

TAS - MF1 __ - 2.50 x 10 - HC - KK3

SERIES	
TAS	250 PSI AIR

NFPA MOUNTS	
MF1	FRONT FLANGE (1.50"- 6.00" Bore)
MF2	REAR FLANGE (1.50"- 6.00" Bore)
MF5	FRONT SQUARE FLANGE (1.50"- 6.00" Bore)
MF6	REAR SQUARE FLANGE (1.50"- 6.00" Bore)
ME3	FRONT MOUNTING HOLES (8.00" Bore)
ME4	REAR MOUNTING HOLES (8.00" Bore)
MP1	REAR PIVOT CLEVIS (1.50"- 8.00" Bore)
MP2	REAR PIVOT CLEVIS (1.50"- 6.00" Bore)
MP4	REAR PIVOT EYE (1.50"- 6.00" Bore)
MS1	FRONT & REAR END ANGLE (1.50"- 8.00" Bore)
MS2	SIDE LUG (1.50"- 8.00" Bore)
MS4	BOTTOM TAPPED HOLES (1.50"- 8.00" Bore)
MT1	FRONT TRUNNION (1.50"- 8.00" Bore)
MT2	REAR TRUNNION (1.50"- 8.00" Bore)
MT4	INTERMEDIATE TRUNNION (1.50"- 8.00" Bore)
MX0	NO MOUNT (1.50"- 8.00" Bore)
MX1	EXTENDED TIE RODS - HEAD & CAP (1.50"-8.00" Bore)
MX2	EXTENDED TIE RODS - CAP (1.50"- 8.00" Bore)
MX3	EXTENDED TIE RODS - HEAD (1.50"- 8.00" Bore)
SB	SPHERICAL BEARING CAP PIVOT (1.50"- 8.00" Bore)

STANDARD PORT AND CUSHION ADJUSTMENT POSITIONS

- Ports - Positions 1 and 5
- Cushion Adjustment - Positions 2 and 6
- Specify Non-Standard Positions When Ordering
- Port Location 9 is Center of Cap Face.

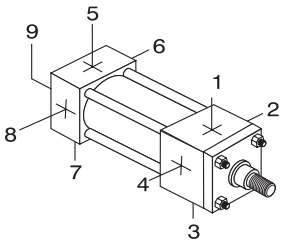

STYLE
SINGLE ROD (LEAVE BLANK)
D (DOUBLE ROD END)

BORE	
1.50	2.00
2.50	3.25
4.00	5.00
6.00	8.00

STROKE
0" TO 120" MADE-TO-ORDER

CUSHIONS	
H	HEAD CUSHION POSITION 2 IS *STANDARD SPECIFY* FOR POSITIONS: 1, 3 & 4
LH	**LONG** HEAD CUSHION POSITION 2 IS *STANDARD SPECIFY* FOR POSITIONS: 1, 3 & 4
C	CAP CUSHION POSITION 6 IS STANDARD SPECIFY FOR POSITIONS: 5, 7 & 8
LC	**LONG** CAP CUSHION POSITION 6 IS STANDARD SPECIFY FOR POSITIONS: 5, 7 & 8
FIXED CUSHIONS	
FCH	FIXED HEAD CUSHION (NON-ADJUSTABLE, NO ADJUSTMENT NEEDLE)
FCC	FIXED CAP CUSHION (NON-ADJUSTABLE, NO ADJUSTMENT NEEDLE)
FC	FIXED HEAD AND CAP CUSHION (NON-ADJUSTABLE, NO ADJUSTMENT NEEDLE)

NOTE: "L" CUSHION OPTION CAN BE ORDERED AS FIXED CUSHIONS.

EXAMPLE: FCLH

OPTION LENGTH ADDER
(ADD TO CATALOG BASIC OVERALL LENGTH DIMENSIONS)

BORE	OPTION			
	B	BC	BH	ST* (STOP TUBE) EXAMPLE: ST=2
1.50	0.500	0.250	0.250	2
2.00	0.500	0.250	0.250	2
2.50	0.500	0.250	0.250	2
3.25	0.500	0.250	0.250	2
4.00	0.500	0.250	0.250	2
5.00	0.500	0.250	0.250	2
6.00	0.500	0.250	0.250	2
8.00	0.500	0.250	0.250	2

*The desired stop tube length adds to the overall cylinder length.

MAXIMUM STROKE RECOMMENDATIONS

BORE	NO CENTER SUPPORT	WITH CENTER SUPPORTS (CS OPTION)	
		ONE SUPPORT	TWO SUPPORTS
1.50", 2.00" & 2.50"	48 INCHES	OVER 48 INCHES	OVER 72 INCHES
3.25", 4.00" & 5.00"	65 INCHES	OVER 65 INCHES	OVER 92 INCHES
6.00"	72 INCHES	OVER 72 INCHES	NOT REQUIRED

OPTIONS		
	ADDS LENGTH TO CYLINDER - "OPTION LENGTH ADDER" CHART BELOW.	
	A=	EXTENDED PISTON ROD THREAD (EXAMPLE: A=2")
	AS	ADJUSTABLE STROKE - RETRACT (SPECIFY LENGTH, EXAMPLE: AS=4")
	A/O	AIR / OIL PISTON
X	B	0.250" URETHANE BUMPER BOTH ENDS
X	BC	0.250" URETHANE BUMPER CAP ONLY
X	BH	0.250" URETHANE BUMPER HEAD ONLY
	BP	BUMPER PISTON SEALS
	BSP	BSPP OR BSPT PORTS (SPECIFY SIZE, EXAMPLE: BSPP=.25")
	C=	EXTENDED PISTON ROD (EXAMPLE: IF C=0.50", THEN 1" ROD EXTENSION IS C=1.50")
	CS	CENTER SUPPORT
	EK	EXTENDED KEY PLATE
	KK2	LARGE MALE ROD THREAD
	KK3	FEMALE ROD THREAD
	KK3M	FEMALE METRIC ROD THREAD
	KK3S	STUDDED PISTON ROD (KK3 WITH STUD, LOCTITE IN PLACE)
	KK3X	FEMALE SPECIAL THREAD
	KK4	FULL DIAMETER MALE ROD THREAD
	KK5	BLANK ROD END (NO THREADS, A=0")
	KK10	ROD COUPLER END
	KKM	MALE METRIC THREAD
	KKX	MALE SPECIAL THREAD
	LF	LOW FRICTION SEALS
	LT	LOW TEMPERATURE SEALS (TEMP RATING: -30°F to 200°F)
	LTE	LOW TEMPERATURE EXTREME SEALS (TEMP RATING:-65°F to 200°F)
	MA	MICRO-ADJUST (12" MAX. STROKE) AVAILABLE ON DOUBLE ROD ENDS
	MAB	MICRO-ADJUST WITH SOUND DAMPENING BUMPER (12" MAX. STROKE)
	MS	METALLIC ROD SCRAPER (BRASS CONSTRUCTION)
	NR	NON-ROTATING
	OP	OPTIONAL PORT LOCATION (EXAMPLE: PORTS @ 3 & 7)
	OS	OVERSIZE ROD DIAMETER (SPECIFY SIZE, EXAMPLE: OS=1.375")
	PLS	PISTON LOCK SCREW
	PMC	SOLID CAST IRON PISTON
	RBB	ROD BUSHING MATERIAL: BRONZE
	SAE	SAE PORTS (SPECIFY SIZE, EXAMPLE: SAE #6)
	SE	SPRING EXTEND
	SR	SPRING RETRACT
	SSA	STAINLESS STEEL PISTON ROD, TIE RODS & NUTS, AND FASTENERS
	SSC	STAINLESS STEEL CUSHION NEEDLES
	SSF	STAINLESS STEEL FASTENERS
	SSN	STAINLESS STEEL TIE ROD NUTS
	SSR	STAINLESS STEEL PISTON ROD
	SST	STAINLESS STEEL TIE RODS & NUTS
X	ST	STOP TUBE NOTE: SPECIFY STOP TUBE LENGTH (IN INCHES) SPECIFY STROKE AS ES (EFFECTIVE STROKE) (EXAMPLE: TAS MS4 2 X 24ES-ST=3)*
	TH	400 PSI HYD. NON-SHOCK
	VS	FLUOROCARBON SEALS
	XX	SPECIAL VARIATION (SPECIFY)

Note: Refer to TAS Options for specifications.

NFPA MOUNTS

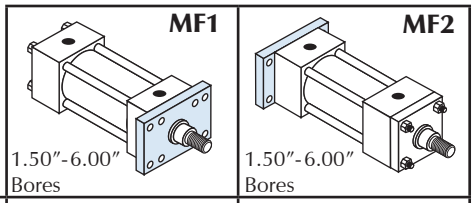

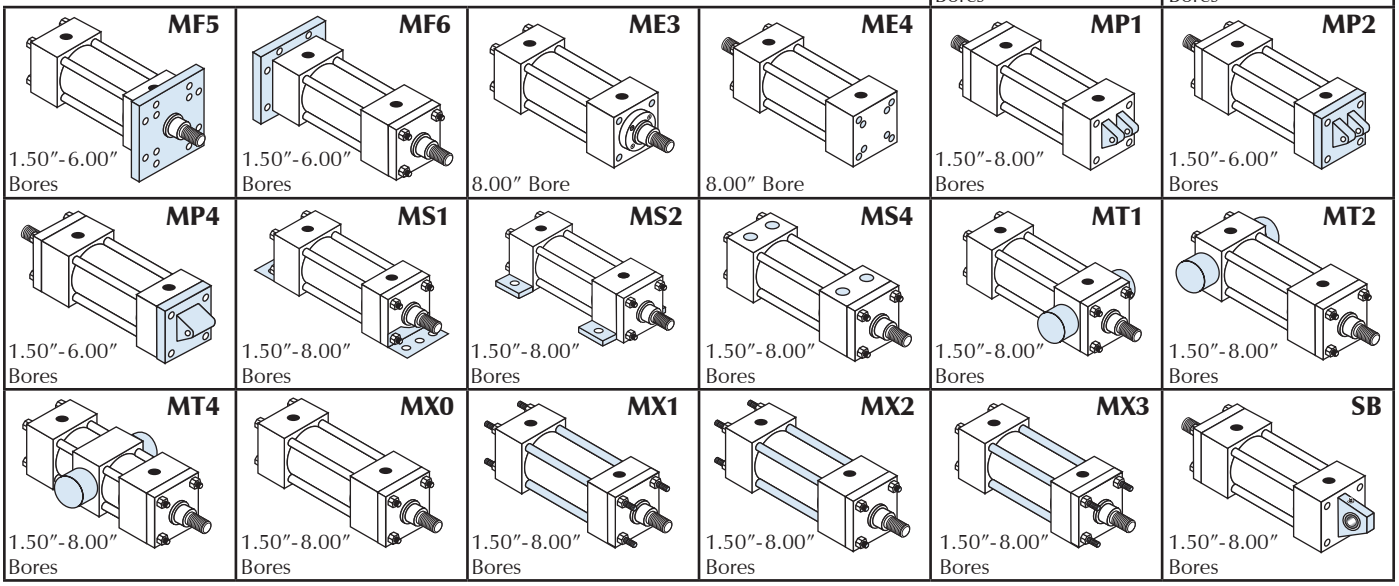

SERIES 'TAS' DIMENSIONS: THREADS

ROD END STYLE: KK1 KK2

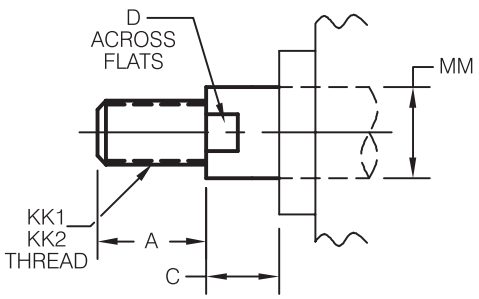

ROD END STYLE: KK3

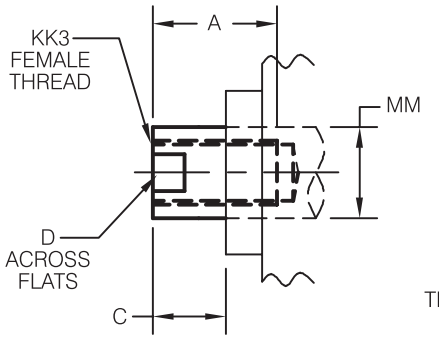

ROD END STYLE: KK4

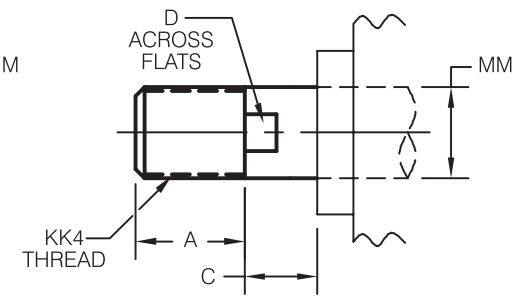

ROD END STYLE: KK5

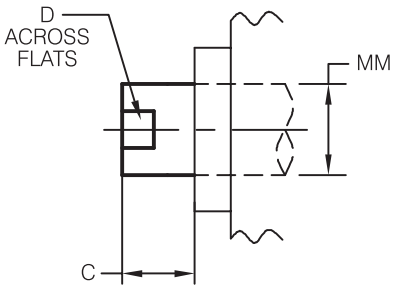

ROD END STYLE: KK10

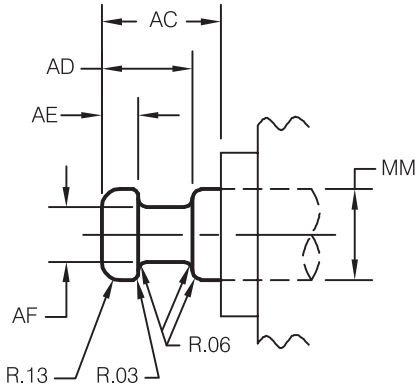

SPANNER HOLES (4.000-5.500 RODS) (SHOWN ON KK1-KK2)

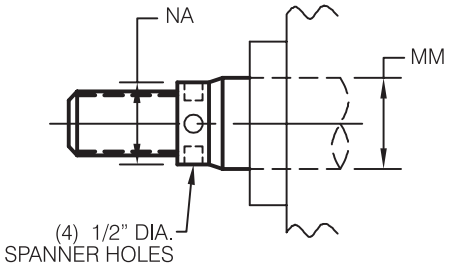

ROD DIA. (MM)	A	C	D	AC	AD	AE	AF	KK1	KK2	KK3	KK4	NA ±.002
0.625	0.750	0.375	0.500	1.125	0.625	0.250	0.375	7/16 - 20	1/2 - 20	7/16 - 20	5/8 - 18	—
1.000	1.125	0.500	0.875	1.625	0.938	0.375	0.688	3/4 - 16	7/8 - 14	3/4 - 16	1 - 14	—
1.375	1.625	0.625	1.125	1.750	1.062	0.375	0.875	1 - 14	1 1/4 - 12	1 - 14	1 3/8 - 12	—
1.750	2.000	0.750	1.500	2.000	1.313	0.500	1.125	1 1/4 - 12	1 1/2 - 12	1 1/4 - 12	1 3/4 - 12	—
2.000	2.250	0.875	1.750	2.625	1.688	0.625	1.375	1 1/2 - 12	1 3/4 - 12	1 1/2 - 12	2 - 12	—
2.500	3.000	1.000	2.250	3.250	1.938	0.750	1.750	1 7/8 - 12	2 1/4 - 12	1 7/8 - 12	2 1/2 - 12	—
3.000	3.500	1.000	2.625	3.625	2.438	0.875	2.250	2 1/4 - 12	2 3/4 - 12	2 1/4 - 12	3 - 12	—
3.500	3.500	1.000	3.000	4.375	2.688	1.000	2.500	2 1/2 - 12	3 1/4 - 12	2 1/2 - 12	3 1/2 - 12	—
4.000	4.000	1.000	—	4.500	2.688	1.000	3.000	3 - 12	3 3/4 - 12	3 - 12	4 - 12	3.875
4.500	4.500	1.000	—	5.250	3.188	1.500	3.500	3 1/4 - 12	4 1/4 - 12	3 1/4 - 12	4 1/2 - 12	4.375
5.000	5.000	1.000	—	5.375	3.188	1.500	3.875	3 1/2 - 12	4 3/4 - 12	3 1/2 - 12	5 - 12	4.875
5.500	5.500	1.000	—	6.250	3.938	1.875	4.375	4 - 12	5 1/4 - 12	4 - 12	5 1/2 - 12	5.375

Four (4) wrench flats is an option.
Rods larger than 3.50″ dia. utilize four (4) 0.50″ dia. spanner holes 0.50″ deep in place of wrench flats and also utilize rod end turn down above.

SERIES 'TAS' DIMENSIONS: BASIC CYLINDER (MX0 MOUNT)

SQUARE RETAINER CONSTRUCTION

FULL SQUARE RETAINER USED ON:	
BORE	ROD DIA.
1.50	0.625
	1.000
2.00	0.625
	1.000
	1.375
2.50	0.625
	1.000
	1.375
	1.750
3.25	1.000
	1.375
	1.750
	2.000
4.00	1.000
	1.375
	1.750
	2.000
	2.500
5.00	1.000
	1.375
	1.750
	2.000
	2.500
	3.000
	3.500
6.00	1.375
	1.750
	2.000
	2.500
	3.000
	3.500
	4.000

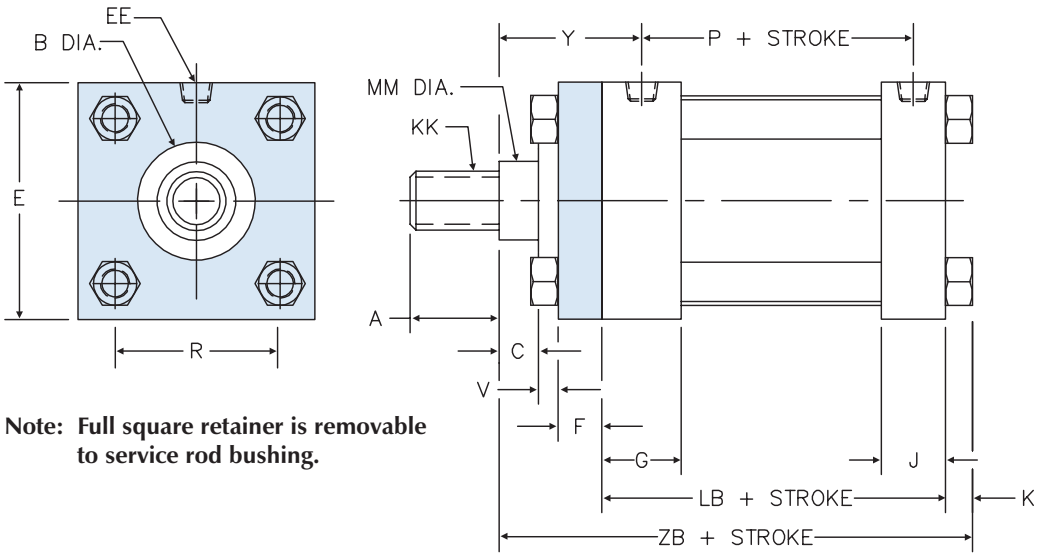

Note: Full square retainer is removable to service rod bushing.

ROUND RETAINER CONSTRUCTION

ROUND RETAINER USED ON:	
BORE	ROD DIA.
8.00	1.375
	1.750
	2.000
	2.500
	3.000
	3.500
	4.000
	4.500
	5.000
	5.500

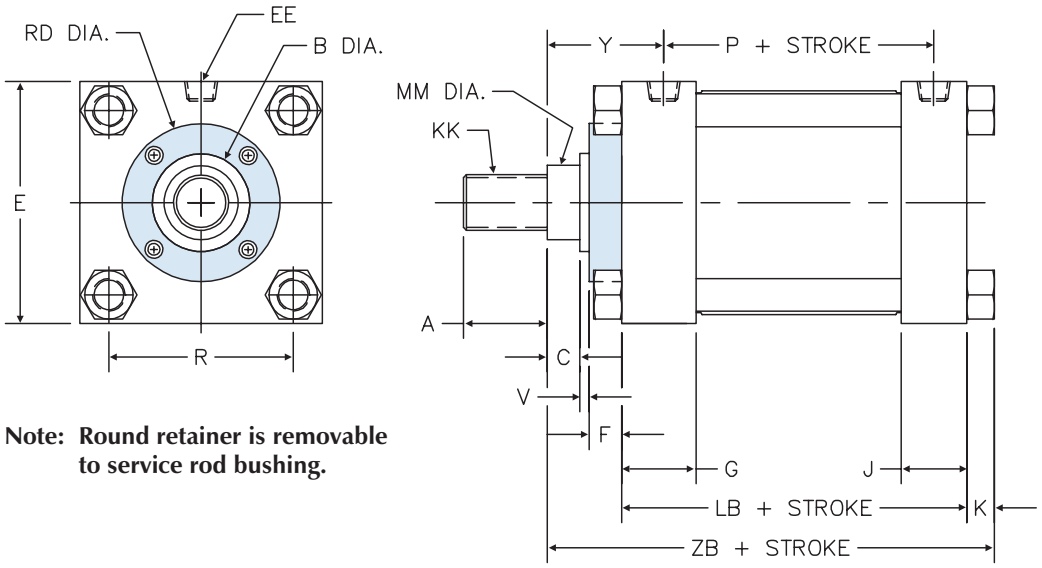

Note: Round retainer is removable to service rod bushing.

EASY FLIP OUT PAGE FOR REFERENCE

SERIES 'TAS' DIMENSIONS: BASIC CYLINDER (MX0 MOUNT)

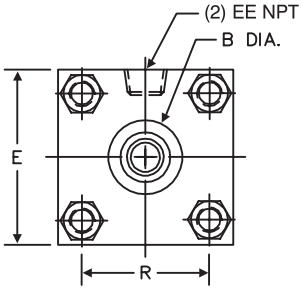

WITH SQUARE RETAINER

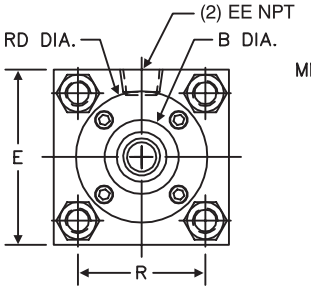

WITH ROUND RETAINER (8.00" BORE ONLY)

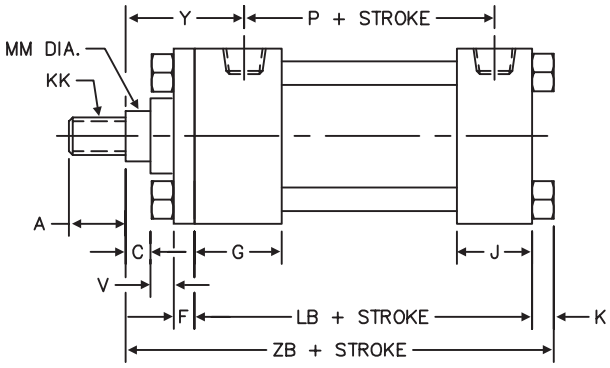

BORE	ROD DIA. (MM)	A	B	C	E	EE NPT	F	G	J	K	KK	LB	P	R	⟨1⟩ RD	V	Y	ZB
1.50	0.625	0.750	1.124	0.375	2.000	3/8	0.375	1.500	1.000	0.250	SEE ROD END DETAIL CHART ON PAGE 104	3.625	2.375	1.430	SQ	0.250	1.875	4.875
	1.000	1.125	1.499	0.500												0.500	2.250	5.250
2.00	0.625	0.750	1.124	0.375	2.500	3/8	0.375	1.500	1.000	0.313		3.625	2.375	1.840	SQ	0.250	1.875	4.938
	1.000	1.125	1.499	0.500												0.500	2.250	5.313
	1.375	1.625	1.999	0.625												0.625	2.500	5.563
2.50	0.625	0.750	1.124	0.375	3.000	3/8	0.375	1.500	1.000	0.313		3.750	2.500	2.190	SQ	0.250	1.875	5.063
	1.000	1.125	1.499	0.500												0.500	2.250	5.438
	1.375	1.625	1.999	0.625												0.625	2.500	5.688
	1.750	2.000	2.374	0.750												0.750	2.750	5.938
3.25	1.000	1.125	1.499	0.500	3.750	1/2	0.625	1.750	1.250	0.375		4.250	2.750	2.760	SQ	0.250	2.375	6.000
	1.375	1.625	1.999	0.625												0.375	2.625	6.250
	1.750	2.000	2.374	0.750												0.500	2.875	6.500
	2.000	2.250	2.624	0.875												0.500	3.000	6.625
4.00	1.000	1.125	1.499	0.500	4.500	1/2	0.625	1.750	1.250	0.375		4.250	2.750	3.320	SQ	0.250	2.375	6.000
	1.375	1.625	1.999	0.625												0.375	2.625	6.250
	1.750	2.000	2.374	0.750												0.500	2.875	6.500
	2.000	2.250	2.624	0.875												0.500	3.000	6.625
	2.500	3.000	3.124	1.000												0.625	3.250	6.875
5.00	1.000	1.125	1.499	0.500	5.500	1/2	0.625	1.750	1.250	0.438		4.500	3.000	4.100	SQ	0.250	2.375	6.313
	1.375	1.625	1.999	0.625												0.375	2.625	6.563
	1.750	2.000	2.374	0.750												0.500	2.875	6.813
	2.000	2.250	2.624	0.875												0.500	3.000	6.983
	2.500	3.000	3.124	1.000												0.625	3.250	7.188
	3.000	3.500	3.749	1.000												0.625	3.250	7.188
	3.500	3.500	4.249	1.000												0.625	3.250	7.188
6.00	1.375	1.625	1.999	0.625	6.500	3/4	0.750	2.000	1.500	0.438		5.000	3.250	4.880	SQ	0.250	2.750	7.063
	1.750	2.000	2.374	0.750												0.375	3.000	7.313
	2.000	2.250	2.624	0.875												0.375	3.125	7.438
	2.500	3.000	3.124	1.000												0.500	3.375	7.688
	3.000	3.500	3.749	1.000												0.500	3.375	7.688
	3.500	3.500	4.249	1.000												0.500	3.375	7.688
	4.000	4.000	4.749	1.000												0.500	3.375	7.688
8.00	1.375	1.625	1.999	0.625	8.500	3/4	0.625	2.000	1.500	0.563		5.125	3.375	6.440	3.500	0.375	2.750	7.313
	1.750	2.000	2.374	0.750			0.625								3.500	0.500	3.000	7.563
	2.000	2.250	2.624	0.875			0.625								5.000	0.500	3.125	7.688
	2.500	3.000	3.124	1.000			0.750								5.000	0.500	3.375	7.938
	3.000	3.500	3.749	1.000			0.750								5.250	0.500	3.375	7.938
	3.500	3.500	4.249	1.000			0.750								5.625	0.500	3.375	7.938
	4.000	4.000	4.749	1.000			0.750								6.500	0.500	3.375	7.938
	4.500	4.500	5.249	1.000			0.750								7.250	0.500	3.375	7.938
	5.000	5.000	5.749	1.000			0.750								7.500	0.500	3.375	7.938
	5.500	5.500	6.249	1.000			0.750								7.500	0.500	3.375	7.938

⟨1⟩ Where SQ is shown in chart, cylinder utilizes a full square retainer.

SERIES 'TAS' DIMENSIONS: BASIC CYLINDER (MX0 MOUNT)

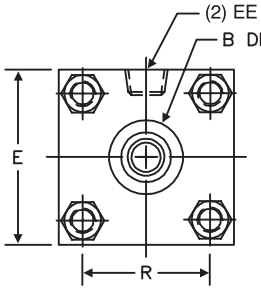

WITH SQUARE RETAINER

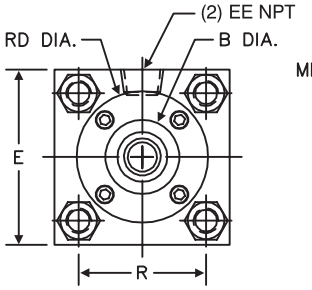

WITH ROUND RETAINER
(8.00" BORE ONLY)

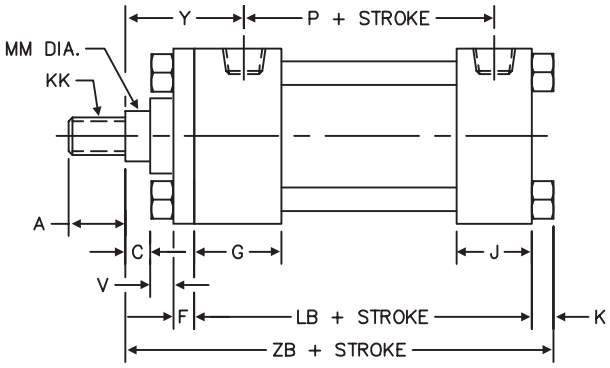

BORE	ROD DIA. (MM)	A	B	C	E	EE NPT	F	G	J	K	KK	LB	P	R	① RD	V	Y	ZB
1.50	0.625	0.750	1.124	0.375	2.000	3/8	0.375	1.500	1.000	0.250	SEE ROD END DETAIL CHART ON PAGE 104	3.625	2.375	1.430	SQ	0.250	1.875	4.875
	1.000	1.125	1.499	0.500												0.500	2.250	5.250
2.00	0.625	0.750	1.124	0.375	2.500	3/8	0.375	1.500	1.000	0.313		3.625	2.375	1.840	SQ	0.250	1.875	4.938
	1.000	1.125	1.499	0.500												0.500	2.250	5.313
	1.375	1.625	1.999	0.625												0.625	2.500	5.563
2.50	0.625	0.750	1.124	0.375	3.000	3/8	0.375	1.500	1.000	0.313		3.750	2.500	2.190	SQ	0.250	1.875	5.063
	1.000	1.125	1.499	0.500												0.500	2.250	5.438
	1.375	1.625	1.999	0.625												0.625	2.500	5.688
	1.750	2.000	2.374	0.750												0.750	2.750	5.938
3.25	1.000	1.125	1.499	0.500	3.750	1/2	0.625	1.750	1.250	0.375		4.250	2.750	2.760	SQ	0.250	2.375	6.000
	1.375	1.625	1.999	0.625												0.375	2.625	6.250
	1.750	2.000	2.374	0.750												0.500	2.875	6.500
	2.000	2.250	2.624	0.875												0.500	3.000	6.625
4.00	1.000	1.125	1.499	0.500	4.500	1/2	0.625	1.750	1.250	0.375		4.250	2.750	3.320	SQ	0.250	2.375	6.000
	1.375	1.625	1.999	0.625												0.375	2.625	6.250
	1.750	2.000	2.374	0.750												0.500	2.875	6.500
	2.000	2.250	2.624	0.875												0.500	3.000	6.625
	2.500	3.000	3.124	1.000												0.625	3.250	6.875
5.00	1.000	1.125	1.499	0.500	5.500	1/2	0.625	1.750	1.250	0.438		4.500	3.000	4.100	SQ	0.250	2.375	6.313
	1.375	1.625	1.999	0.625												0.375	2.625	6.563
	1.750	2.000	2.374	0.750												0.500	2.875	6.813
	2.000	2.250	2.624	0.875												0.500	3.000	6.983
	2.500	3.000	3.124	1.000												0.625	3.250	7.188
	3.000	3.500	3.749	1.000												0.625	3.250	7.188
	3.500	3.500	4.249	1.000												0.625	3.250	7.188
6.00	1.375	1.625	1.999	0.625	6.500	3/4	0.750	2.000	1.500	0.438		5.000	3.250	4.880	SQ	0.250	2.750	7.063
	1.750	2.000	2.374	0.750												0.375	3.000	7.313
	2.000	2.250	2.624	0.875												0.375	3.125	7.438
	2.500	3.000	3.124	1.000												0.500	3.375	7.688
	3.000	3.500	3.749	1.000												0.500	3.375	7.688
	3.500	3.500	4.249	1.000												0.500	3.375	7.688
	4.000	4.000	4.749	1.000												0.500	3.375	7.688
8.00	1.375	1.625	1.999	0.625	8.500	3/4	0.625	2.000	1.500	0.563		5.125	3.375	6.440	3.500	0.375	2.750	7.313
	1.750	2.000	2.374	0.750			0.625								3.500	0.500	3.000	7.563
	2.000	2.250	2.624	0.875			0.625								5.000	0.500	3.125	7.688
	2.500	3.000	3.124	1.000			0.750								5.000	0.500	3.375	7.938
	3.000	3.500	3.749	1.000			0.750								5.250	0.500	3.375	7.938
	3.500	3.500	4.249	1.000			0.750								5.625	0.500	3.375	7.938
	4.000	4.000	4.749	1.000			0.750								6.500	0.500	3.375	7.938
	4.500	4.500	5.249	1.000			0.750								7.250	0.500	3.375	7.938
	5.000	5.000	5.749	1.000			0.750								7.500	0.500	3.375	7.938
	5.500	5.500	6.249	1.000			0.750								7.500	0.500	3.375	7.938

① Where SQ is shown in chart, cylinder utilizes a full square retainer.

SERIES 'TAS' DIMENSIONS: TRUNNION MOUNTS

MT1: HEAD TRUNNION

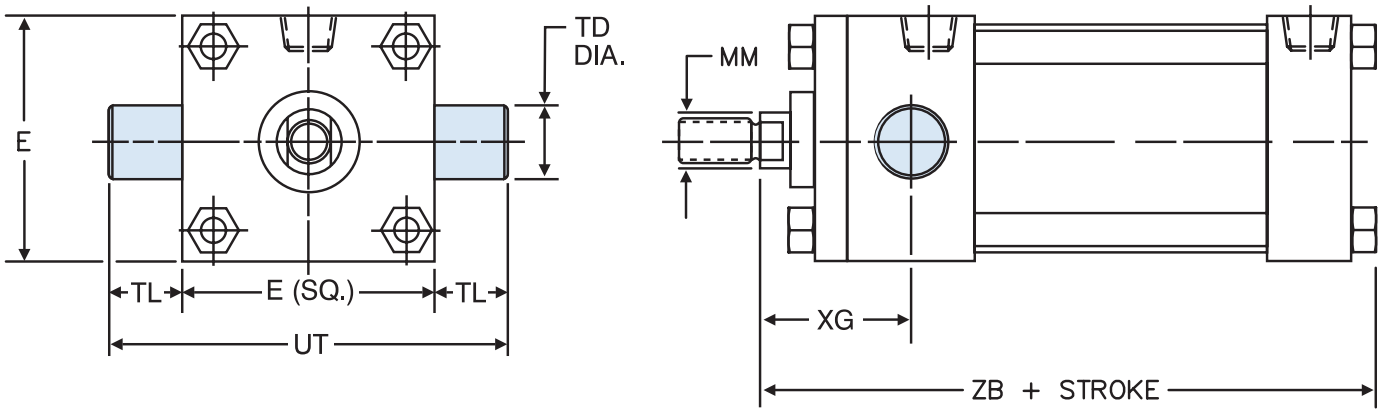

MT2: CAP TRUNNION

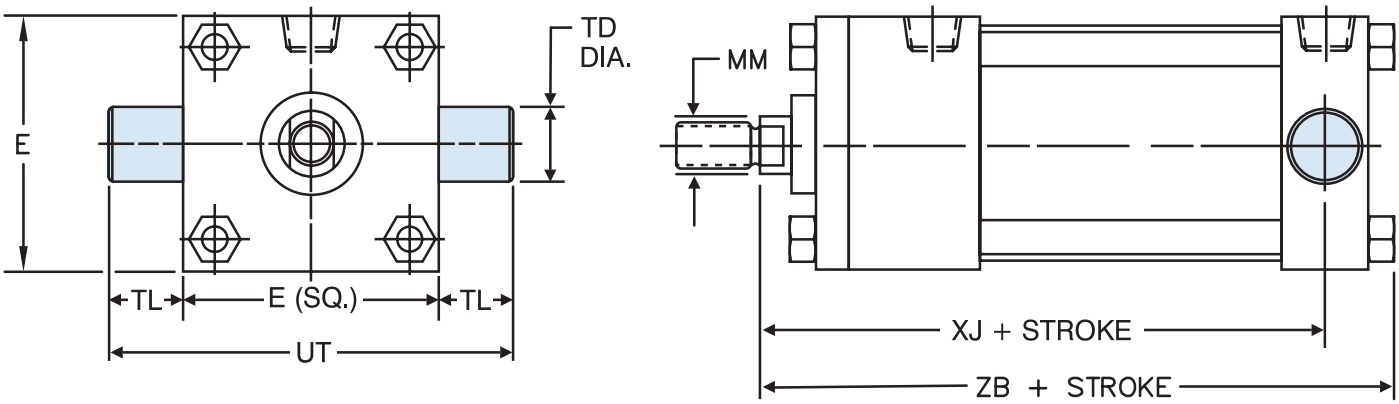

MT4: INTERMEDIATE TRUNNION

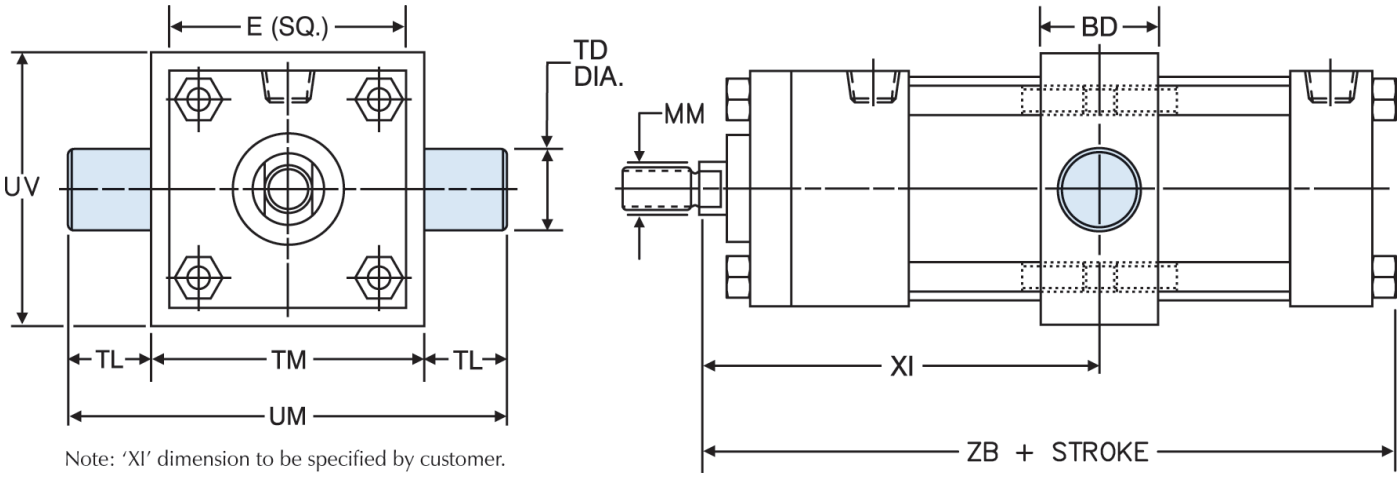

Note: 'XI' dimension to be specified by customer.

'MT1', 'MT2', 'MT4' STANDARD CUSHION LOCATIONS		
MOUNT	HEAD CUSHION	CAP CUSHION
MT1	3	6
MT2	2	7
MT4	2	6

Note: Ports or cushions cannot be on same side as MT1 & MT2 trunnions.

SERIES 'TAS' DIMENSIONS: TRUNNION MOUNTS

BORE	ROD DIA. (MM)	E	BD	① TD	TL	TM	UM	UT	UV	XG	② XI	MT4 MIN STROKE	ADD TO STROKE XJ	ADD TO STROKE ZB
1.50	0.625	2.000	1.250	1.000	1.000	2.500	4.500	4.000	2.500	1.750	3.250	0.375	4.125	4.875
	1.000									2.125	3.625		4.500	5.250
2.00	0.625	2.500	1.500	1.000	1.000	3.000	5.000	4.500	3.000	1.750	3.375	0.625	4.125	4.938
	1.000									2.125	3.750		4.500	5.313
	1.375									2.375	4.000		4.750	5.563
2.50	0.625	3.000	1.500	1.000	1.000	3.500	5.500	5.000	3.500	1.750	3.375	0.500	4.250	5.063
	1.000									2.125	3.750		4.625	5.438
	1.375									2.375	4.000		4.875	5.688
	1.750									2.625	4.250		5.125	5.938
3.25	1.000	3.750	2.000	1.000	1.000	4.500	6.500	5.750	4.250	2.250	4.250	1.000	5.000	6.000
	1.375									2.500	4.500		5.250	6.250
	1.750									2.750	4.750		5.500	6.500
	2.000									2.875	4.875		5.625	6.625
4.00	1.000	4.500	2.000	1.000	1.000	5.250	7.250	6.500	5.000	2.250	4.250	1.000	5.000	6.000
	1.375									2.500	4.500		5.250	6.250
	1.750									2.750	4.750		5.500	6.500
	2.000									2.875	4.875		5.625	6.625
	2.500									3.125	5.125		5.875	6.875
5.00	1.000	5.500	2.000	1.000	1.000	6.250	8.250	7.500	6.000	2.250	4.250	0.750	5.250	6.313
	1.375									2.500	4.500		5.500	6.563
	1.750									2.750	4.750		5.750	6.813
	2.000									2.875	4.875		5.875	6.938
	2.500									3.125	5.125		6.125	7.188
	3.000									3.125	5.125		6.125	7.188
	3.500									3.125	5.125		6.125	7.188
6.00	1.375	6.500	2.000	1.375	1.375	7.625	10.375	9.250	7.000	2.625	4.750	0.750	5.875	7.063
	1.750									2.875	5.000		6.125	7.313
	2.000									3.000	5.125		6.250	7.438
	2.500									3.250	5.375		6.500	7.688
	3.000									3.250	5.375		6.500	7.688
	3.500									3.250	5.375		6.500	7.688
	4.000									3.250	5.375		6.500	7.688
8.00	1.375	8.500	2.500	1.375	1.375	9.750	12.500	11.250	9.500	2.625	5.000	1.125	6.000	7.313
	1.750									2.875	5.250		6.250	7.563
	2.000									3.000	5.375		6.375	7.688
	2.500									3.250	5.625		6.625	7.938
	3.000									3.250	5.625		6.625	7.938
	3.500									3.250	5.625		6.625	7.938
	4.000									3.250	5.625		6.625	7.938
	4.500									3.250	5.625		6.625	7.938
	5.000									3.250	5.625		6.625	7.938
	5.500									3.250	5.625		6.625	7.938

① 'TD' dimension tolerance is + .000 / - .001

② 'XI' dimension is the minimum that can be supplied and leaves 1/8" gap between head & trunnion block; customer to specify 'XI' dimension.

SERIES 'TAS' DIMENSIONS: EXTENDED TIE ROD MOUNTS

MX1: EXTENDED TIE-RODS - HEAD & CAP

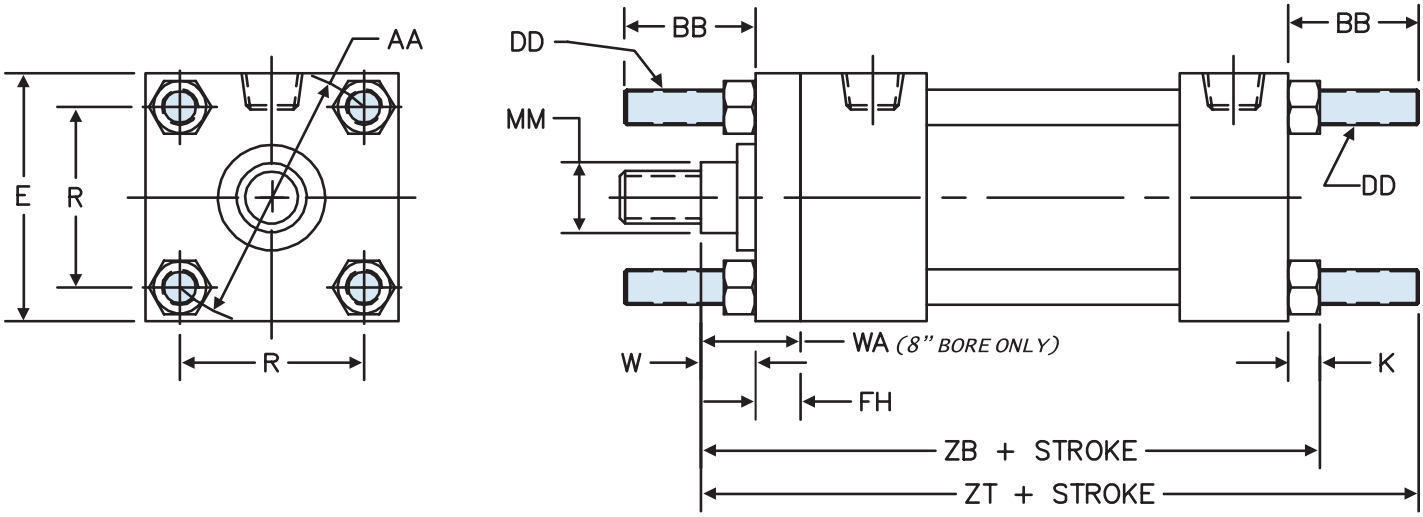

MX2: EXTENDED TIE-RODS - CAP END

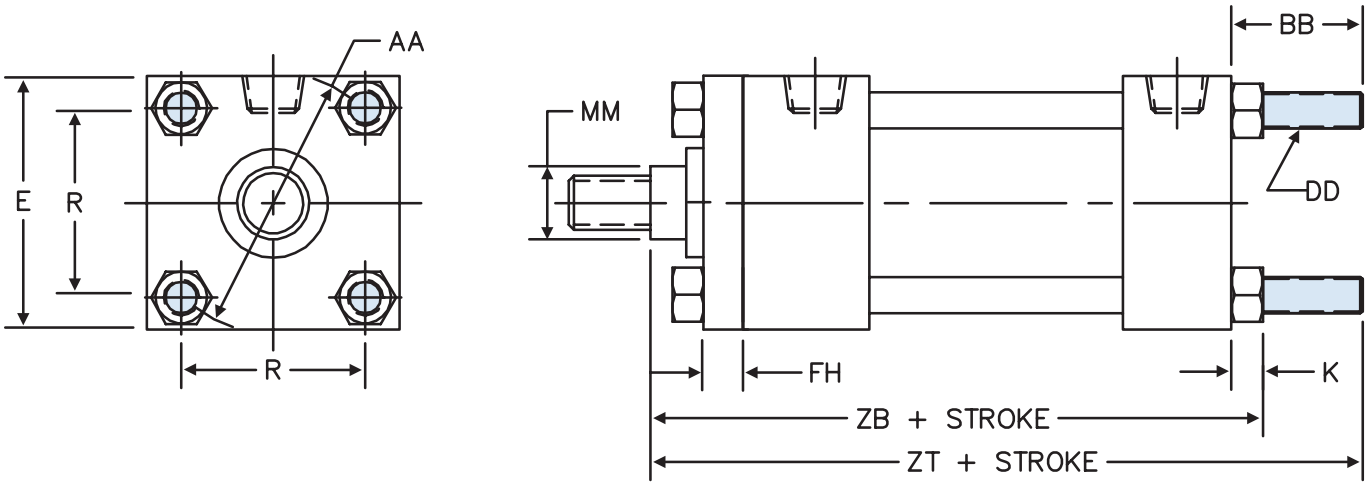

MX3: EXTENDED TIE-RODS - HEAD END

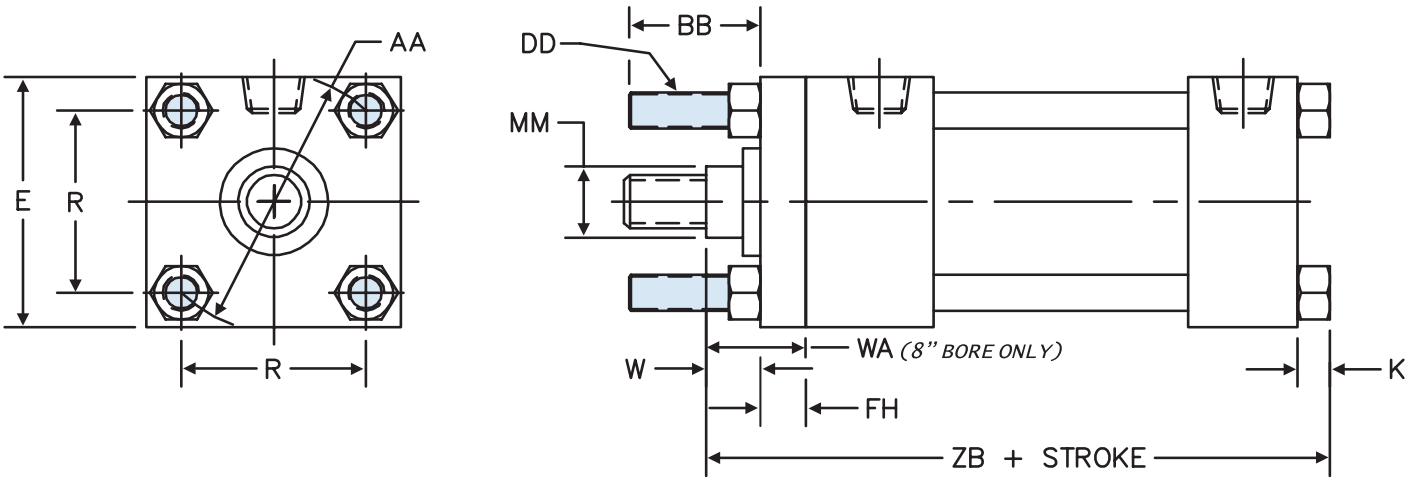

SERIES 'TAS' DIMENSIONS: EXTENDED TIE ROD MOUNTS

BORE	ROD DIA. (MM)	E	FH	AA	BB	DD	K	R	① RD	W or WA (8")	ADD TO STROKE ZB	ADD TO STROKE ZT
1.50	0.625	2.000	0.375	2.020	1.000	1/4 - 28	0.250	1.430	SQ	0.625	4.875	5.625
	1.000									1.000	5.250	6.000
2.00	0.625	2.500	0.375	2.600	1.125	5/16 - 24	0.313	1.840	SQ	0.625	4.938	5.750
	1.000									1.000	5.313	6.125
	1.375									1.250	5.563	6.375
2.50	0.625	3.000	0.375	3.100	1.125	5/16 - 24	0.313	2.190	SQ	0.625	5.063	5.875
	1.000									1.000	5.438	6.250
	1.375									1.250	5.688	6.500
	1.750									1.500	5.938	6.750
3.25	1.000	3.750	0.625	3.900	1.375	3/8 - 24	0.375	2.760	SQ	0.750	6.000	7.000
	1.375									1.000	6.250	7.250
	1.750									1.250	6.500	7.500
	2.000									1.375	6.625	7.625
4.00	1.000	4.500	0.625	4.700	1.375	3/8 - 24	0.375	3.320	SQ	0.750	6.000	7.000
	1.375									1.000	6.250	7.250
	1.750									1.250	6.500	7.500
	2.000									1.375	6.625	7.625
	2.500									1.625	6.875	7.875
5.00	1.000	5.500	0.625	5.800	1.813	1/2 - 20	0.438	4.100	SQ	0.750	6.313	7.688
	1.375									1.000	6.563	7.938
	1.750									1.250	6.813	8.188
	2.000									1.375	6.938	8.313
	2.500									1.625	7.188	8.563
	3.000									1.625	7.188	8.563
	3.500									1.625	7.188	8.563
6.00	1.375	6.500	0.750	6.900	1.813	1/2 - 20	0.438	4.880	SQ	0.875	7.063	8.438
	1.750									1.125	7.313	8.688
	2.000									1.250	7.438	8.813
	2.500									1.500	7.688	9.063
	3.000									1.500	7.688	9.063
	3.500									1.500	7.688	9.063
	4.000									1.500	7.688	9.063
8.00	1.375	8.500	0.625	9.100	② 2.313	5/8 - 18	0.563	6.440	3.500	1.625	7.313	9.063
	1.750		0.625						3.500	1.875	7.563	9.313
	2.000		0.625						5.000	2.000	7.688	9.438
	2.500		0.750						5.000	2.250	7.938	9.688
	3.000		0.750						5.250	2.250	7.938	9.688
	3.500		0.750						5.625	2.250	7.938	9.688
	4.000		0.750						6.500	2.250	7.938	9.688
	4.500		0.750						7.250	2.250	7.938	9.688
	5.000		0.750						7.500	2.250	7.938	9.688
	5.500		0.750						7.500	2.250	7.938	9.688

① Where SQ is shown in chart, cylinder utilizes a full square retainer. ALL MX1 & MX3 MOUNTS USE FULL SQ. RETAINER.

② Round retainer used to retain bushing, not a full front plate as other bores. 'BB' is dimension from head on the 8.00" bore.

SERIES 'TAS' DIMENSIONS: FLANGE MOUNTS

MF1: HEAD FLANGE

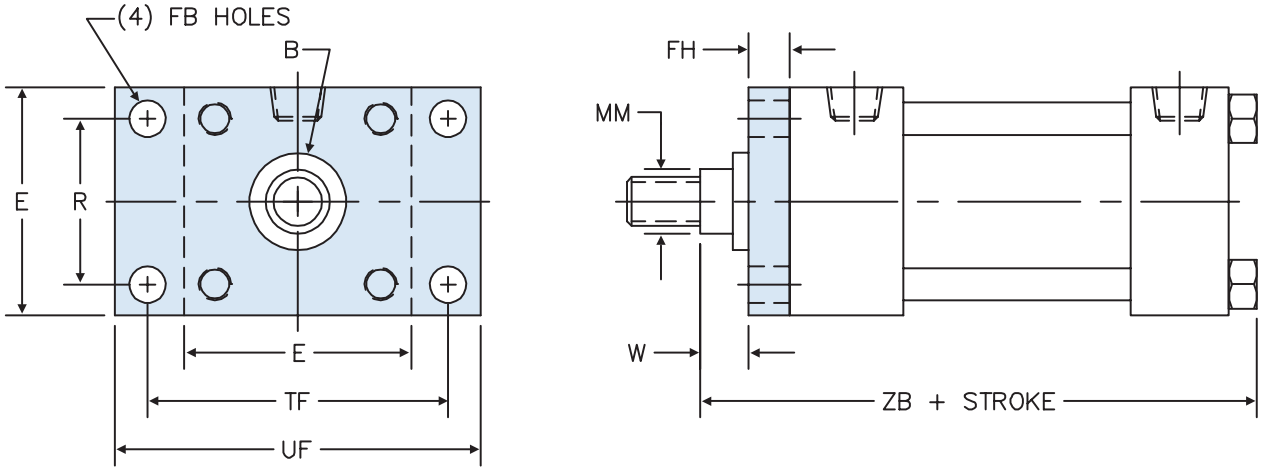

MF2: CAP FLANGE

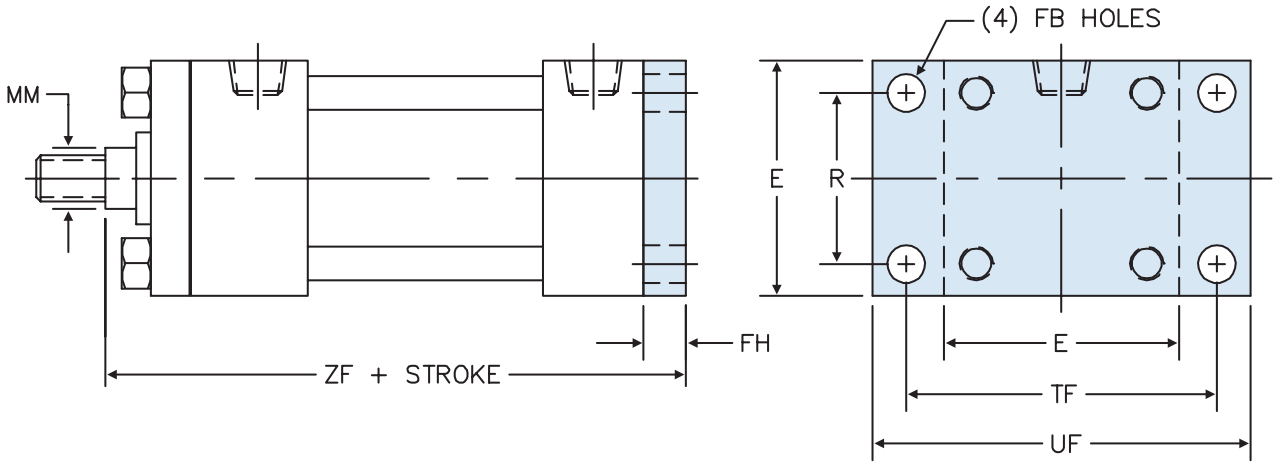

MF5: HEAD SQUARE FLANGE

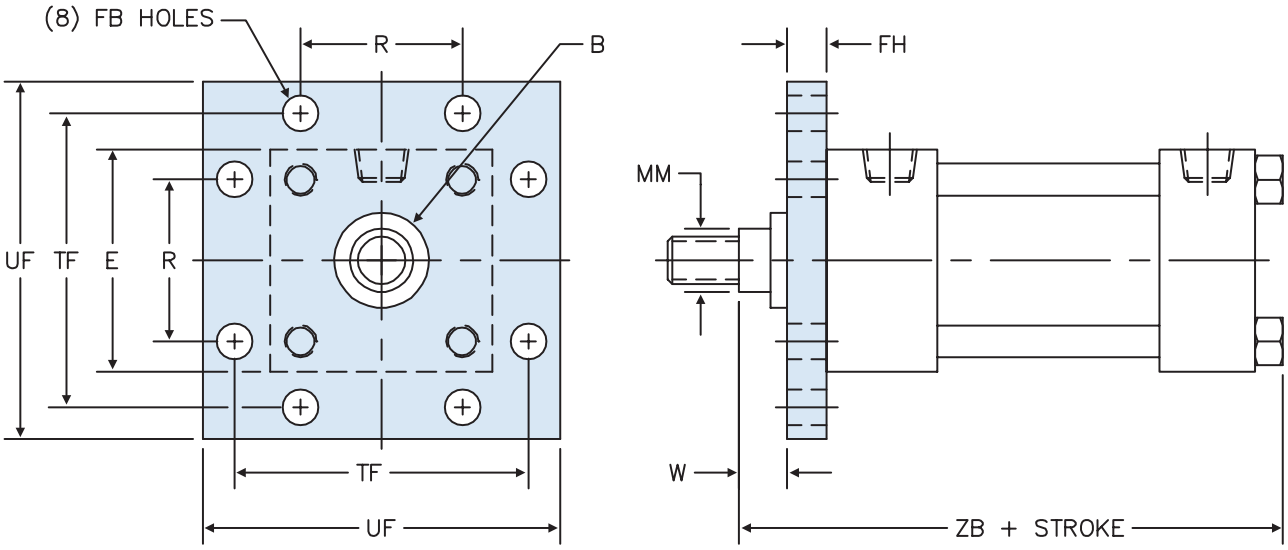

SERIES 'TAS' DIMENSIONS: FLANGE MOUNTS

MF6: CAP SQUARE FLANGE

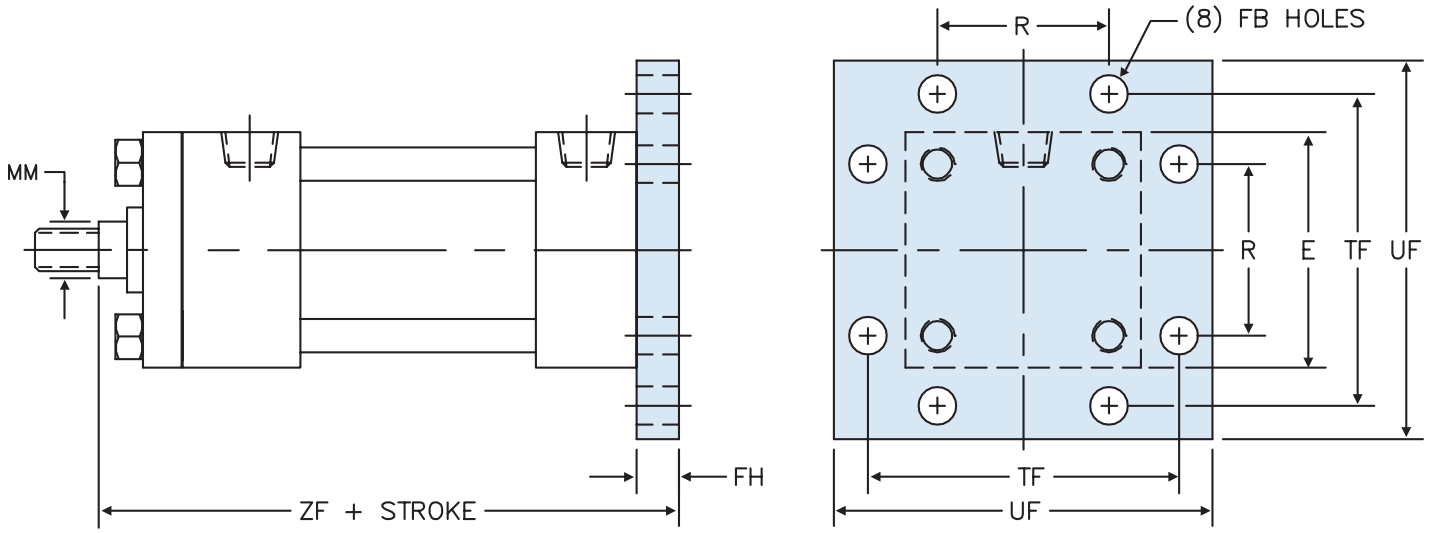

BORE	ROD DIA. (MM)	B	E	FB	FH	R	TF	UF	W	ADD TO STROKE ZB	ADD TO STROKE ZF
1.50	0.625	1.124	2.000	0.313	0.375	1.438	2.750	3.375	0.625	4.875	5.000
	1.000	1.499							1.000	5.250	5.375
2.00	0.625	1.124	2.500	0.375	0.375	1.844	3.375	4.125	0.625	4.938	5.000
	1.000	1.499							1.000	5.313	5.375
	1.375	1.999							1.250	5.563	5.625
2.50	0.625	1.124	3.000	0.375	0.375	2.188	3.875	4.625	0.625	5.063	5.125
	1.000	1.499							1.000	5.438	5.500
	1.375	1.999							1.250	5.688	5.750
	1.750	2.374							1.500	5.938	6.000
3.25	1.000	1.499	3.750	0.438	0.625	2.766	4.688	5.500	0.750	6.000	6.250
	1.375	1.999							1.000	6.250	6.500
	1.750	2.374							1.250	6.500	6.750
	2.000	2.624							1.375	6.625	6.875
4.00	1.000	1.499	4.500	0.438	0.625	3.328	5.438	6.250	0.750	6.000	6.250
	1.375	1.999							1.000	6.250	6.500
	1.750	2.374							1.250	6.500	6.750
	2.000	2.624							1.375	6.625	6.875
	2.500	3.124							1.625	6.875	7.125
5.00	1.000	1.499	5.500	0.563	0.625	4.109	6.625	7.625	0.750	6.313	6.500
	1.375	1.999							1.000	6.563	6.750
	1.750	2.374							1.250	6.813	7.000
	2.000	2.624							1.375	6.938	7.125
	2.500	3.124							1.625	7.188	7.375
	3.000	3.749							1.625	7.188	7.375
	3.500	4.249							1.625	7.188	7.375
6.00	1.375	1.999	6.500	0.563	0.750	4.875	7.625	8.625	0.875	7.063	7.375
	1.750	2.374							1.125	7.313	7.625
	2.000	2.624							1.250	7.438	7.750
	2.500	3.124							1.500	7.688	8.000
	3.000	3.749							1.500	7.688	8.000
	3.500	4.249							1.500	7.688	8.000
	4.000	4.749							1.500	7.688	8.000

SERIES 'TAS' DIMENSIONS: FLANGE MOUNTS

ME3: HEAD SQUARE MOUNTING HOLES

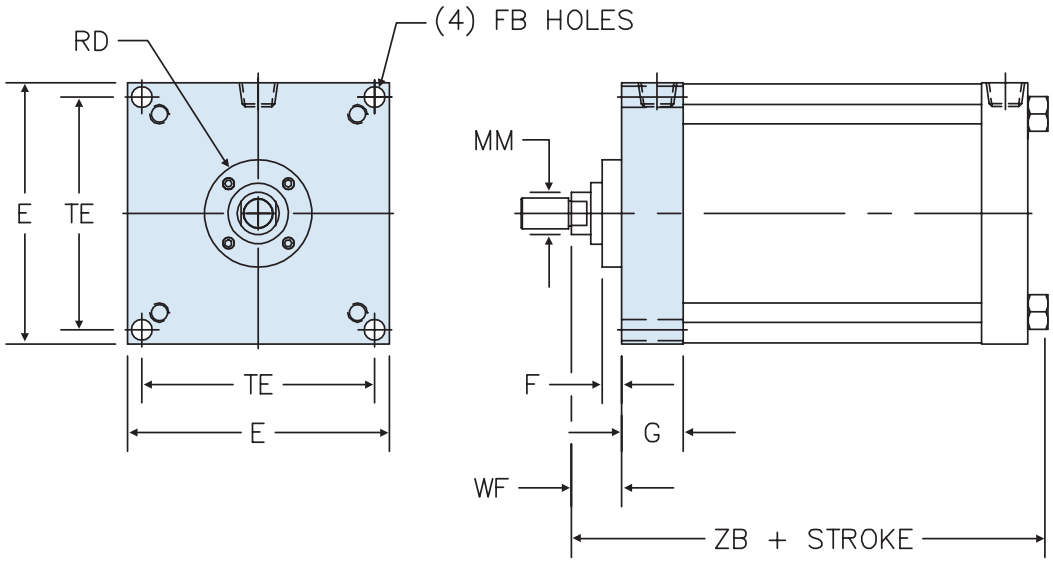

ME4: CAP SQUARE MOUNTING HOLES

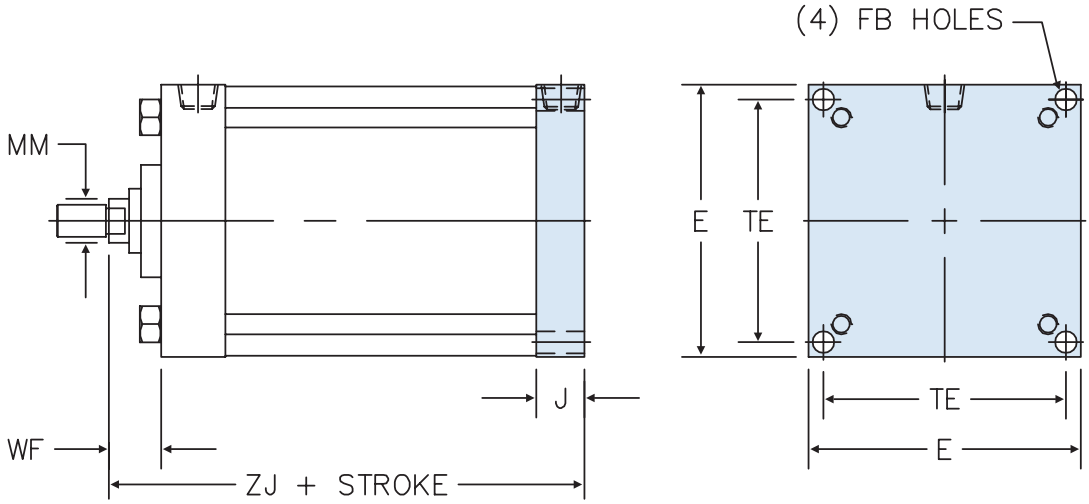

BORE	ROD DIA. (MM)	E	F	FB	G	J	TE	RD	WF	ADD TO STROKE ZB	ADD TO STROKE ZJ
8.00	1.375	8.500	0.625	0.688	2.000	1.500	7.570	3.500	1.625	7.313	6.750
	1.750		0.625					3.500	1.875	7.563	7.000
	2.000		0.625					5.000	2.000	7.688	7.125
	2.500		0.750					5.000	2.250	7.938	7.375
	3.000		0.750					5.250	2.250	7.938	7.375
	3.500		0.750					5.625	2.250	7.938	7.375
	4.000		0.750					6.500	2.250	7.938	7.375
	4.500		0.750					7.250	2.250	7.938	7.375
	5.000		0.750					7.500	2.250	7.938	7.375
	5.500		0.750					7.500	2.250	7.938	7.375

SERIES 'TAS' DIMENSIONS: BASE MOUNTS

MS1: BASE MOUNT

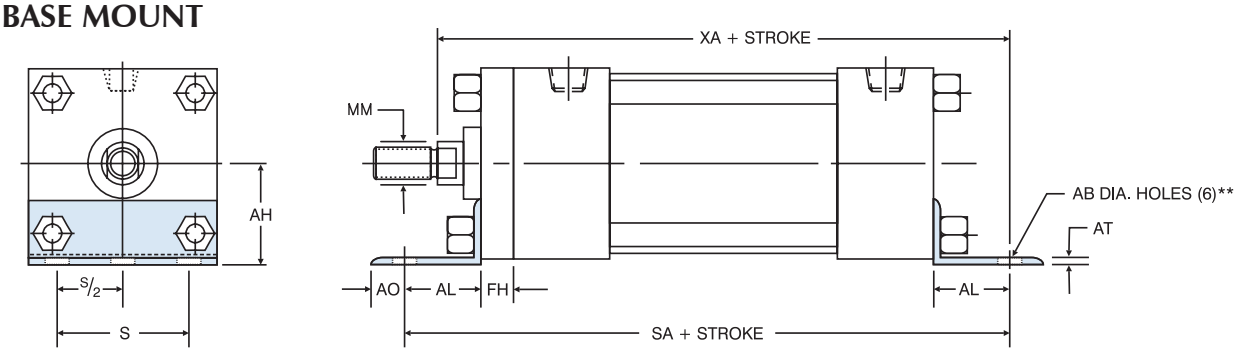

'MS1' ANGLE MOUNT DIMENSIONS										
									ADD TO STROKE	
BORE	ROD DIA. (MM)	AB	AH	AL	AO	AT	FH	S	SA	XA
1.50	0.625	0.438	1.188	1.000	0.375	0.188	0.375	1.250	6.000	5.625
	1.000									6.000
2.00	0.625	0.438	1.438	1.000	0.375	0.188	0.375	1.750	6.000	5.625
	1.000									6.000
	1.375									6.250
2.50	0.625	0.438	1.625	1.000	0.375	0.188	0.375	2.250	6.125	5.750
	1.000									6.125
	1.375									6.375
	1.750									6.625
3.25	1.000	0.563	1.938	1.250	0.500	0.125	0.625	2.750	7.375	6.875
	1.375									7.125
	1.750									7.375
	2.000									7.500
4.00	1.000	0.563	2.250	1.250	0.500	0.125	0.625	3.500	7.375	6.875
	1.375									7.125
	1.750									7.375
	2.000									7.500
	2.500									7.750
5.00	1.000	0.688	2.750	1.375	0.625	0.188	0.625	4.250	7.875	7.250
	1.375									7.500
	1.750									7.750
	2.000									7.875
	2.500									8.125
	3.000									8.125
	3.500									8.125
6.00	1.375	0.813	3.250	1.375	0.625	0.188	0.750	5.250	8.500	8.000
	1.750									8.250
	2.000									8.375
	2.500									8.625
	3.000									8.625
	3.500									8.625
	4.000									8.625
8.00*	1.375	0.813	4.250	1.813	0.688	0.250	0.625	7.125	8.750	8.563
	1.750						0.625			8.813
	2.000						0.625			8.938
	2.500						0.750			9.188
	3.000						0.750			9.188
	3.500						0.750			9.188
	4.000						0.750			9.188
	4.500						0.750			9.188
	5.000						0.750			9.188
	5.500						0.750			9.188

*8.00" bore utilizes a round retainer.
**1.50" bore has (4) AB diameter holes.

SERIES 'TAS' DIMENSIONS: LUG MOUNTS

MS2: SIDE LUGS

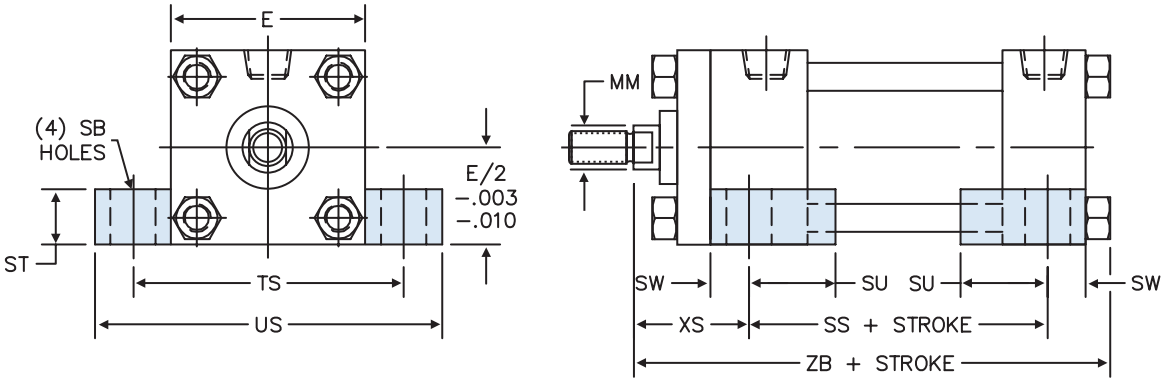

BORE	ROD DIA. (MM)	E	SB	ST	SU	SW	TS	US	XS	ADD TO STROKE SS	ADD TO STROKE ZB
1.50	0.625	2.000	0.438	0.500	1.125	0.375	2.750	3.500	1.375	2.875	4.875
	1.000								1.750		5.250
2.00	0.625	2.500	0.438	0.500	1.125	0.375	3.250	4.000	1.375	2.875	4.938
	1.000								1.750		5.313
	1.375								2.000		5.563
2.50	0.625	3.000	0.438	0.500	1.125	0.375	3.750	4.500	1.375	3.000	5.063
	1.000								1.750		5.438
	1.375								2.000		5.688
	1.750								2.250		5.938
3.25	1.000	3.750	0.563	0.750	1.250	0.500	4.750	5.750	1.875	3.250	6.000
	1.375								2.125		6.250
	1.750								2.375		6.500
	2.000								2.500		6.625
4.00	1.000	4.500	0.563	0.750	1.250	0.500	5.500	6.500	1.875	3.250	6.000
	1.375								2.125		6.250
	1.750								2.375		6.500
	2.000								2.500		6.625
	2.500								2.750		6.875
5.00	1.000	5.500	0.813	1.000	1.063	0.688	6.875	8.250	2.063	3.125	6.313
	1.375								2.313		6.563
	1.750								2.563		6.813
	2.000								2.688		6.938
	2.500								2.938		7.188
	3.000								2.938		7.188
	3.500								2.938		7.188
6.00	1.375	6.500	0.813	1.000	1.313	0.688	7.875	9.250	2.313	3.625	7.063
	1.750								2.563		7.313
	2.000								2.688		7.438
	2.500								2.938		7.688
	3.000								2.938		7.688
	3.500								2.938		7.688
	4.000								2.938		7.688
8.00	1.375	8.500	0.813	1.000	1.313	0.688	9.875	11.250	2.313	3.750	7.313
	1.750								2.563		7.563
	2.000								2.688		7.688
	2.500								2.938		7.938
	3.000								2.938		7.938
	3.500								2.938		7.938
	4.000								2.938		7.938
	4.500								2.938		7.938
	5.000								2.938		7.938
	5.500								2.938		7.938

SERIES 'TAS' DIMENSIONS: BOTTOM MOUNTS

MS4: BOTTOM TAPPED HOLES

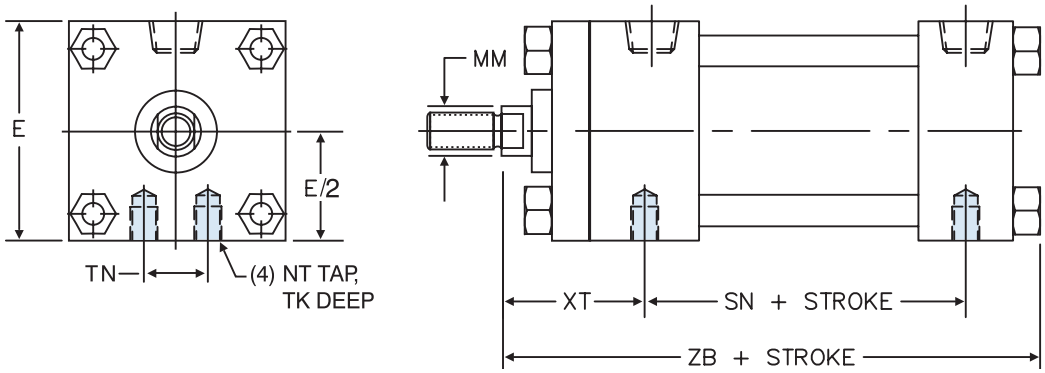

BORE	ROD DIA. (MM)	E	NT	TN	TK	XT	ADD TO STROKE SN	ADD TO STROKE ZB
1.50	0.625	2.000	1/4 - 20	0.625	0.375	1.938	2.250	4.875
	1.000					2.313		5.250
2.00	0.625	2.500	5/16 - 18	0.875	0.500	1.938	2.250	4.938
	1.000				0.500	2.313		5.313
	1.375				0.375	2.563		5.563
2.50	0.625	3.000	3/8 - 16	1.250	0.625	1.938	2.375	5.063
	1.000				0.625	2.313		5.438
	1.375				0.438	2.563		5.688
	1.750				0.375	2.813		5.938
3.25	1.000	3.750	1/2 - 13	1.500	0.750	2.438	2.625	6.000
	1.375				0.750	2.688		6.250
	1.750				0.500	2.938		6.500
	2.000				0.500	3.063		6.625
4.00	1.000	4.500	1/2 - 13	2.063	0.750	2.438	2.625	6.000
	1.375				0.750	2.688		6.250
	1.750				0.750	2.938		6.500
	2.000				0.750	3.063		6.625
	2.500				0.625	3.313		6.875
5.00	1.000	5.500	5/8 - 11	2.688	1.000	2.438	2.875	6.313
	1.375				1.000	2.688		6.563
	1.750				1.000	2.938		6.813
	2.000				1.000	3.063		6.938
	2.500				1.000	3.313		7.188
	3.000				0.750	3.313		7.188
	3.500				0.625	3.313		7.188
6.00	1.375	6.500	3/4 - 10	3.250	1.125	2.813	3.125	7.063
	1.750				1.125	3.063		7.313
	2.000				1.125	3.188		7.438
	2.500				1.125	3.438		7.688
	3.000				1.125	3.438		7.688
	3.500				1.125	3.438		7.688
	4.000				1.000	3.438		7.688
8.00	1.375	8.500	3/4 - 10	4.500	1.125	2.813	3.250	7.313
	1.750					3.063		7.563
	2.000					3.188		7.688
	2.500					3.438		7.938
	3.000					3.438		7.938
	3.500					3.438		7.938
	4.000					3.438		7.938
	4.500					3.438		7.938
	5.000					3.438		7.938
	5.500					3.438		7.938

SERIES 'TAS' DIMENSIONS: PIVOT MOUNTS

MP1: REAR PIVOT CLEVIS

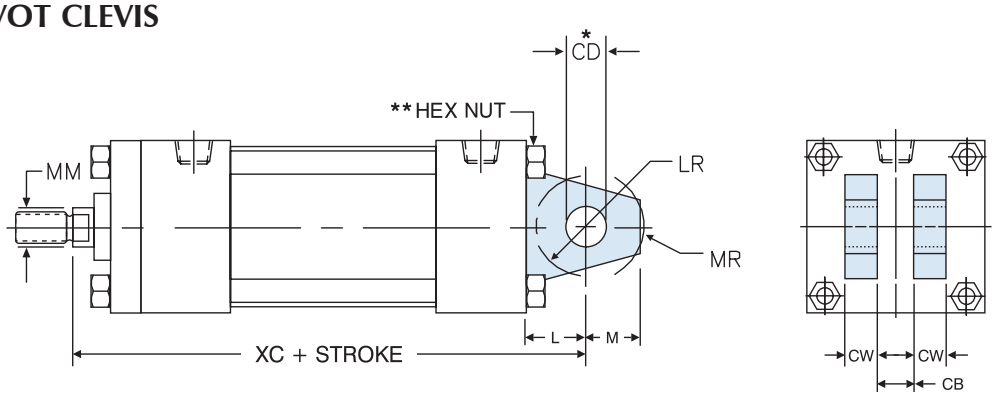

BORE	ROD DIA. (MM)	CB	CD	CW	E	L	LR	M	MR	ADD TO STROKE XC
1.50	0.625	0.750	0.500	0.500	2.000	0.750	0.750	0.500	0.625	5.375
	1.000									5.750
2.00	0.625	0.750	0.500	0.500	2.500	0.750	0.750	0.500	0.625	5.375
	1.000									5.750
	1.375									6.000
2.50	0.625	0.750	0.500	0.500	3.000	0.750	0.750	0.500	0.625	5.500
	1.000									5.875
	1.375									6.125
	1.750									6.375
3.25	1.000	1.250	0.750	0.625	3.750	1.250	1.000	0.750	0.938	6.875
	1.375									7.125
	1.750									7.375
	2.000									7.500
4.00	1.000	1.250	0.750	0.625	4.500	1.250	1.000	0.750	0.938	6.875
	1.375									7.125
	1.750									7.375
	2.000									7.500
	2.500									7.750
5.00	1.000	1.250	0.750	0.625	5.500	1.250	1.000	0.750	0.938	7.125
	1.375									7.375
	1.750									7.625
	2.000									7.750
	2.500									8.000
	3.000									8.000
	3.500									8.000
6.00	1.375	1.500	1.000	0.750	6.500	1.500	1.250	1.000	1.188	8.125
	1.750									8.375
	2.000									8.500
	2.500									8.750
	3.000									8.750
	3.500									8.750
	4.000									8.750
8.00	1.375	1.500	1.000	0.750	8.500	1.500	1.250	1.000	1.188	8.250
	1.750									8.500
	2.000									8.625
	2.500									8.875
	3.000									8.875
	3.500									8.875
	4.000									8.875
	4.500									8.875
	5.000									8.875
	5.500									8.875

*Clevis pins are provided with pivot mounts.
**Hex nuts are located on cap end (4.00"-8.00" bores).

SERIES 'TAS' DIMENSIONS: PIVOT MOUNTS

MP2 & MP4: REAR PIVOT DETACHABLE CLEVIS

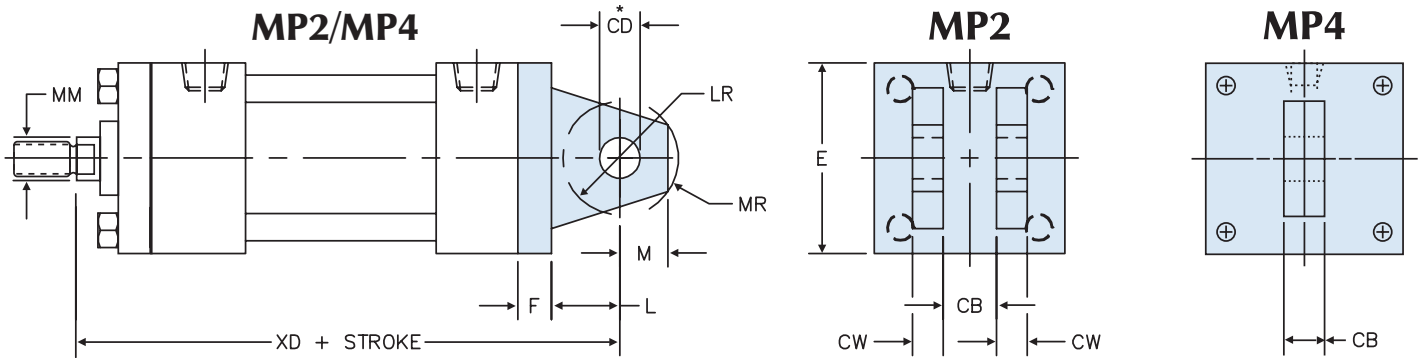

IRON CASTING:
1.50"-6.00" BORES

IRON CASTING:
1.50"- 4.00" BORES
WELDMENT:
5.00"-6.00" BORES

BORE	ROD DIA. (MM)	CB	CD	CW	E	F	L	LR	M	MR	ADD TO STROKE XD
1.50	0.625	0.750	0.500	0.500	2.000	0.375	0.750	0.750	0.500	0.625	5.750
	1.000										6.125
2.00	0.625	0.750	0.500	0.500	2.500	0.375	0.750	0.750	0.500	0.625	5.750
	1.000										6.125
	1.375										6.375
2.50	0.625	0.750	0.500	0.500	3.000	0.375	0.750	0.750	0.500	0.625	5.875
	1.000										6.250
	1.375										6.500
	1.750										6.750
3.25	1.000	1.250	0.750	0.625	3.750	0.625	1.250	1.000	0.750	0.938	7.500
	1.375										7.750
	1.750										8.000
	2.000										8.125
4.00	1.000	1.250	0.750	0.625	4.500	0.625	1.250	1.000	0.750	0.938	7.500
	1.375										7.750
	1.750										8.000
	2.000										8.125
	2.500										8.375
5.00	1.000	1.250	0.750	0.625	5.500	0.625	1.250	1.000	0.750	0.938	7.750
	1.375										8.000
	1.750										8.250
	2.000										8.375
	2.500										8.625
	3.000										8.625
	3.500										8.625
6.00	1.375	1.500	1.000	0.750	6.500	0.750	1.500	1.250	1.000	1.188	8.875
	1.750										9.125
	2.000										9.250
	2.500										9.500
	3.000										9.500
	3.500										9.500
	4.000										9.500

*Clevis pins are provided with pivot mounts.

SERIES 'TAS' DIMENSIONS: SPHERICAL BEARING MOUNT

SB: SPHERICAL BEARING

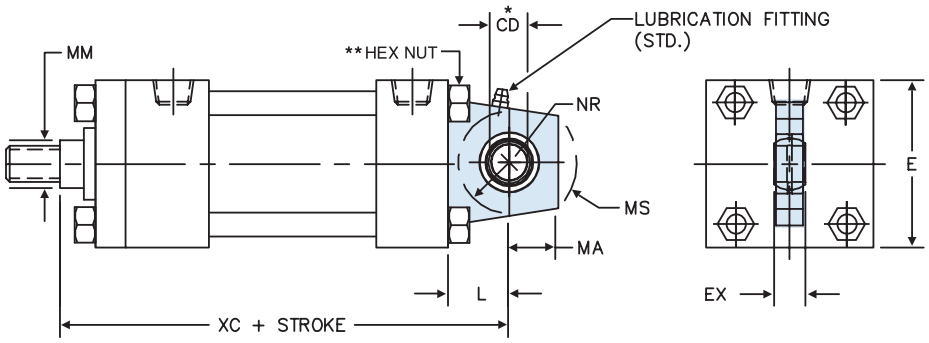

BORE	ROD DIA. (MM)	CD	E	EX	L	MA	MS	NR	ADD TO STROKE XC
1.50	0.625	0.500	2.000	0.437	0.750	0.750	0.938	0.625	5.375
	1.000								5.750
2.00	0.625	0.500	2.500	0.437	0.750	0.750	0.938	0.625	5.375
	1.000								5.750
	1.375								6.000
2.50	0.625	0.500	3.000	0.437	0.750	0.750	0.938	0.625	5.500
	1.000								5.875
	1.375								6.125
	1.750								6.375
3.25	1.000	0.750	3.750	0.656	1.250	1.000	1.375	1.000	6.875
	1.375								7.125
	1.750								7.375
	2.000								7.500
4.00	1.000	0.750	4.500	0.656	1.250	1.000	1.375	1.000	6.875
	1.375								7.125
	1.750								7.375
	2.000								7.500
	2.500								7.750
5.00	1.000	0.750	5.500	0.656	1.250	1.000	1.375	1.000	7.125
	1.375								7.375
	1.750								7.625
	2.000								7.750
	2.500								8.000
	3.000								8.000
	3.500								8.000
6.00	1.375	1.000	6.500	0.875	1.500	1.250	1.688	1.250	8.125
	1.750								8.375
	2.000								8.500
	2.500								8.750
	3.000								8.750
	3.500								8.750
	4.000								8.750
8.00	1.375	1.000	8.500	0.875	1.500	1.250	1.688	1.250	8.250
	1.750								8.500
	2.000								8.625
	2.500								8.875
	3.000								8.875
	3.500								8.875
	4.000								8.875
	4.500								8.875
	5.000								8.875
	5.500								8.875

*Clevis pins are provided with pivot mounts.
**Hex nuts are located on cap end (3.25"-8.00" bores).

Note: Must specify KK3 rod end if to be used with 'HH-MSRE' series rod eye.

SERIES 'TAS' DIMENSIONS: BASIC DOUBLE ROD END MOUNTS

MX0D: NO MOUNT

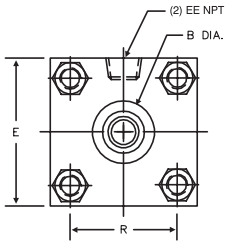

WITH SQUARE RETAINER

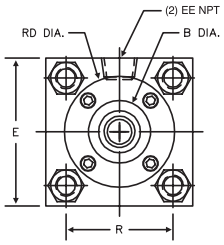

WITH ROUND RETAINER
(8.00" BORE ONLY)

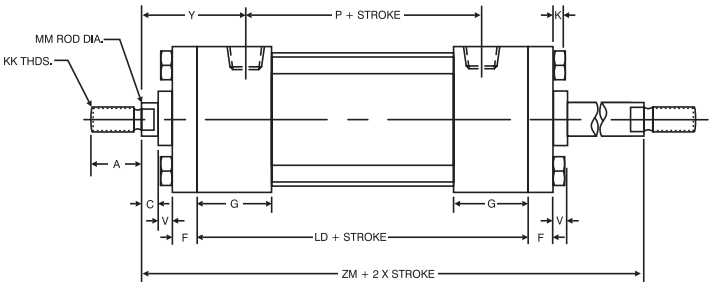

BORE	ROD DIA. (MM)	A	B	C	E	EE NPT	F	G	K	KK	LD	P	R	① RD	V	Y	ZM
1.50	0.625	0.750	1.124	0.375	2.000	3/8	0.375	1.500	0.250	SEE ROD END DETAIL CHART ON PAGE 104	4.125	2.375	1.438	SQ	0.250	1.875	6.125
	1.000	1.125	1.499	0.500											0.500	2.250	6.875
2.00	0.625	0.750	1.124	0.375	2.500	3/8	0.375	1.500	0.313		4.125	2.375	1.844	SQ	0.250	1.875	6.125
	1.000	1.125	1.499	0.500											0.500	2.250	6.875
	1.375	1.625	1.999	0.625											0.625	2.500	7.375
2.50	0.625	0.750	1.124	0.375	3.000	3/8	0.375	1.500	0.313		4.250	2.500	2.188	SQ	0.250	1.875	6.250
	1.000	1.125	1.499	0.500											0.500	2.250	7.000
	1.375	1.625	1.999	0.625											0.625	2.500	7.500
	1.750	2.000	2.374	0.750											0.750	2.750	8.000
3.25	1.000	1.125	1.499	0.500	3.750	1/2	0.625	1.750	0.375		4.750	2.750	2.766	SQ	0.250	2.375	7.500
	1.375	1.625	1.999	0.625											0.375	2.625	8.000
	1.750	2.000	2.374	0.750											0.500	2.875	8.500
	2.000	2.250	2.624	0.875											0.500	3.000	8.750
4.00	1.000	1.125	1.499	0.500	4.500	1/2	0.625	1.750	0.375		4.750	2.750	3.328	SQ	0.250	2.375	7.500
	1.375	1.625	1.999	0.625											0.375	2.625	8.000
	1.750	2.000	2.374	0.750											0.500	2.875	8.500
	2.000	2.250	2.624	0.875											0.500	3.000	8.750
	2.500	3.000	3.124	1.000											0.625	3.250	9.250
5.00	1.000	1.125	1.499	0.500	5.500	1/2	0.625	1.750	0.438		5.000	3.000	4.109	SQ	0.250	2.375	7.750
	1.375	1.625	1.999	0.625											0.375	2.625	8.250
	1.750	2.000	2.374	0.750											0.500	2.875	8.750
	2.000	2.250	2.624	0.875											0.500	3.000	9.000
	2.500	3.000	3.124	1.000											0.625	3.250	9.500
	3.000	3.500	3.749	1.000											0.625	3.250	9.500
	3.500	3.500	4.249	1.000											0.625	3.250	9.500
6.00	1.375	1.625	1.999	0.625	6.500	3/4	0.750	2.000	0.438		5.500	3.250	4.875	SQ	0.250	2.750	8.750
	1.750	2.000	2.374	0.750											0.375	3.000	9.250
	2.000	2.250	2.624	0.875											0.375	3.125	9.500
	2.500	3.000	3.124	1.000											0.500	3.375	10.000
	3.000	3.500	3.749	1.000											0.500	3.375	10.000
	3.500	3.500	4.249	1.000											0.500	3.375	10.000
	4.000	4.000	4.749	1.000											0.500	3.375	10.000
8.00	1.375	1.625	1.999	0.625	8.500	3/4	0.625	2.000	0.563		5.625	3.375	6.438	3.500	0.250	2.750	8.875
	1.750	2.000	2.374	0.750			0.625							3.500	0.375	3.000	9.375
	2.000	2.250	2.624	0.875			0.625							5.000	0.375	3.125	9.625
	2.500	3.000	3.124	1.000			0.750							5.000	0.500	3.375	10.125
	3.000	3.500	3.749	1.000			0.750							5.250	0.500	3.375	10.125
	3.500	3.500	4.249	1.000			0.750							5.625	0.500	3.375	10.125
	4.000	4.000	4.749	1.000			0.750							6.500	0.500	3.375	10.125
	4.500	4.500	5.249	1.000			0.750							7.250	0.500	3.375	10.125
	5.000	5.000	5.749	1.000			0.750							7.500	0.500	3.375	10.125
	5.500	5.500	6.249	1.000			0.750							7.500	0.500	3.375	10.125

① Where SQ is shown in chart, cylinder utilizes a full square retainer.

SERIES 'TAS' DIMENSIONS: DOUBLE ROD END MOUNTS

MT1D: HEAD TRUNNION

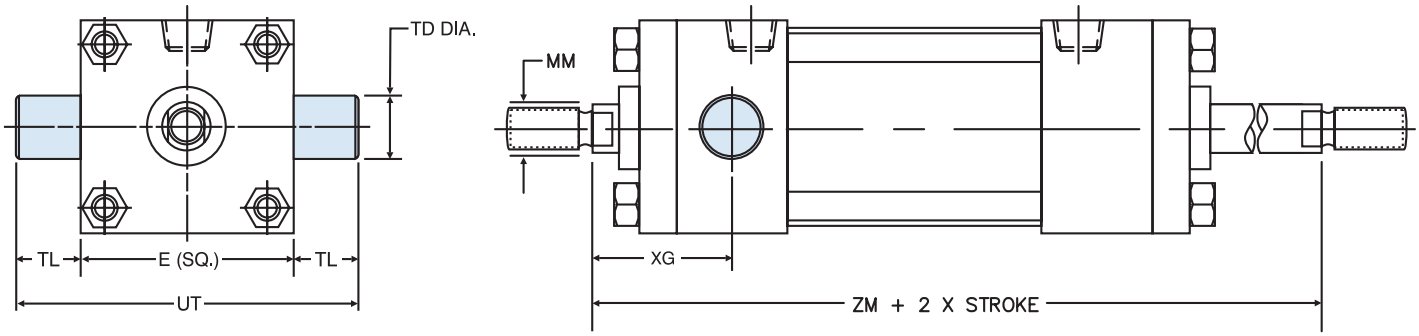

MT4D: INTERMEDIATE TRUNNION

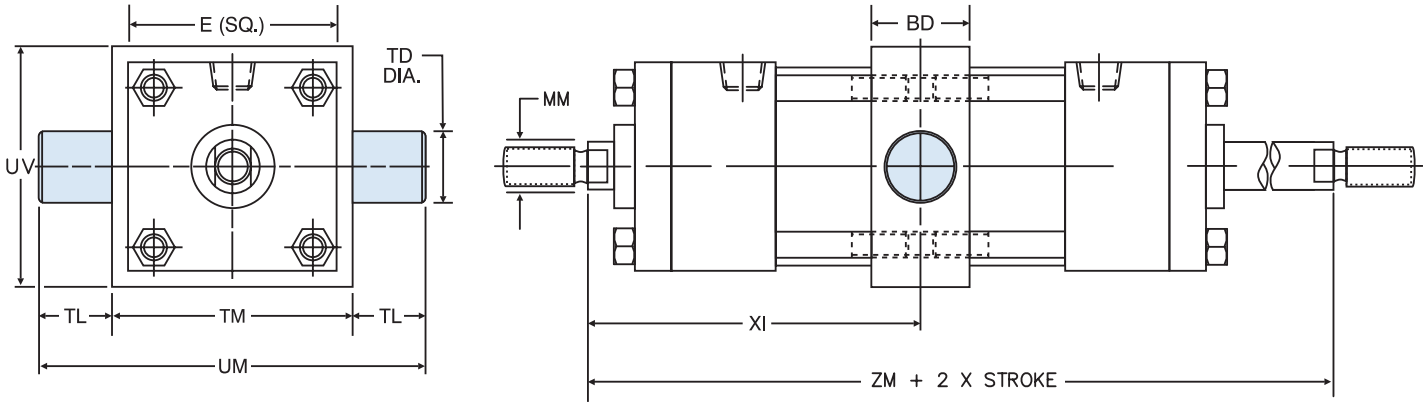

Note: 'XI' dimensions to be specified by customer.

'MT1D', 'MT4D' STANDARD CUSHION LOCATIONS		
MOUNT	HEAD CUSHION	CAP CUSHION
MT1D	3	6
MT4D	2	6

Note: Ports or cushions cannot be on same side as MT1D trunnions.

SERIES 'TAS' DIMENSIONS: DOUBLE ROD END MOUNTS

BORE	ROD DIA. (MM)	E	BD	① TD	TL	TM	UM	UT	UV	XG	② XI	MT4D MIN STROKE	ADD 2X STROKE ZM
1.50	0.625	2.000	1.250	1.000	1.000	2.500	4.500	4.000	2.500	1.750	3.250	0.375	6.125
	1.000									2.125	3.625		6.875
2.00	0.625	2.500	1.500	1.000	1.000	3.000	5.000	4.500	3.000	1.750	3.375	0.625	6.125
	1.000									2.125	3.750		6.875
	1.375									2.375	4.000		7.375
2.50	0.625	3.000	1.500	1.000	1.000	3.500	5.500	5.000	3.500	1.750	3.375	0.500	6.250
	1.000									2.125	3.750		7.000
	1.375									2.375	4.000		7.500
	1.750									2.625	4.250		8.000
3.25	1.000	3.750	2.000	1.000	1.000	4.500	6.500	5.750	4.250	2.250	4.250	1.000	7.500
	1.375									2.500	4.500		8.000
	1.750									2.750	4.750		8.500
	2.000									2.875	4.875		8.750
4.00	1.000	4.500	2.000	1.000	1.000	5.250	7.250	6.500	5.000	2.250	4.250	1.000	7.500
	1.375									2.500	4.500		8.000
	1.750									2.750	4.750		8.500
	2.000									2.875	4.875		8.750
	2.500									3.125	5.125		9.250
5.00	1.000	5.500	2.000	1.000	1.000	6.250	8.250	7.500	6.000	2.250	4.250	0.750	7.750
	1.375									2.500	4.500		8.250
	1.750									2.750	4.750		8.750
	2.000									2.875	4.875		9.000
	2.500									3.125	5.125		9.500
	3.000									3.125	5.125		9.500
	3.500									3.125	5.125		9.500
6.00	1.375	6.500	2.000	1.375	1.375	7.625	10.375	9.250	7.000	2.625	4.750	0.750	8.750
	1.750									2.875	5.000		9.250
	2.000									3.000	5.125		9.500
	2.500									3.250	5.375		10.000
	3.000									3.250	5.375		10.000
	3.500									3.250	5.375		10.000
	4.000									3.250	5.375		10.000
8.00	1.375	8.500	2.500	1.375	1.375	9.750	12.500	11.250	9.500	2.625	5.000	1.125	8.875
	1.750									2.875	5.250		9.375
	2.000									3.000	5.375		9.625
	2.500									3.250	5.625		10.125
	3.000									3.250	5.625		10.125
	3.500									3.250	5.625		10.125
	4.000									3.250	5.625		10.125
	4.500									3.250	5.625		10.125
	5.000									3.250	5.625		10.125
	5.500									3.250	5.625		10.125

① 'TD' dimension tolerance is + .000 / - .001

② 'XI' dimension is the minimum that can be supplied and leaves 1/8" gap between head & trunnion block (customer to specify 'XI' dimension).

SERIES 'TAS' DIMENSIONS: DOUBLE ROD END MOUNTS

MX1D: EXTENDED TIE RODS - HEAD & CAP

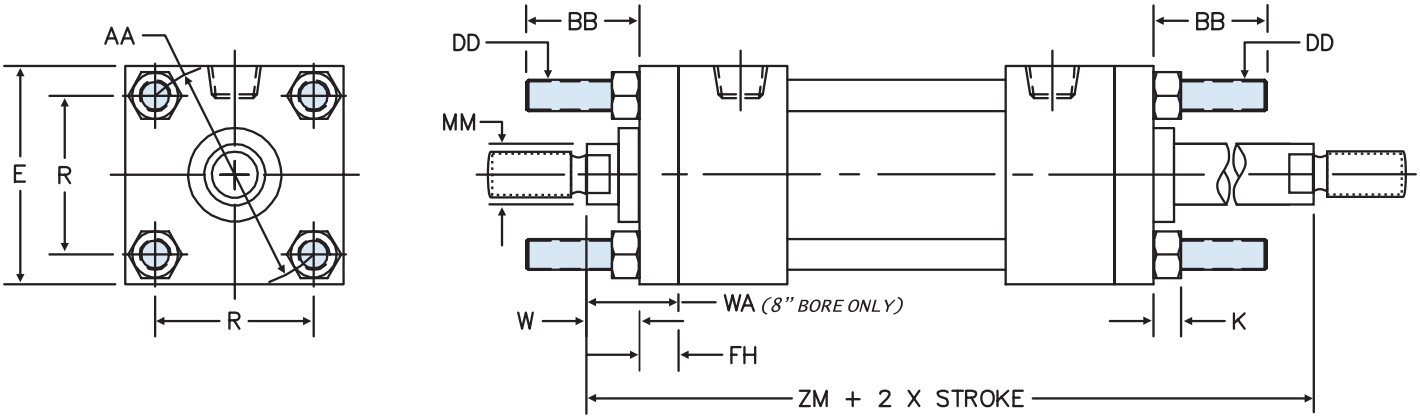

MX3D: EXTENDED TIE RODS - HEAD END

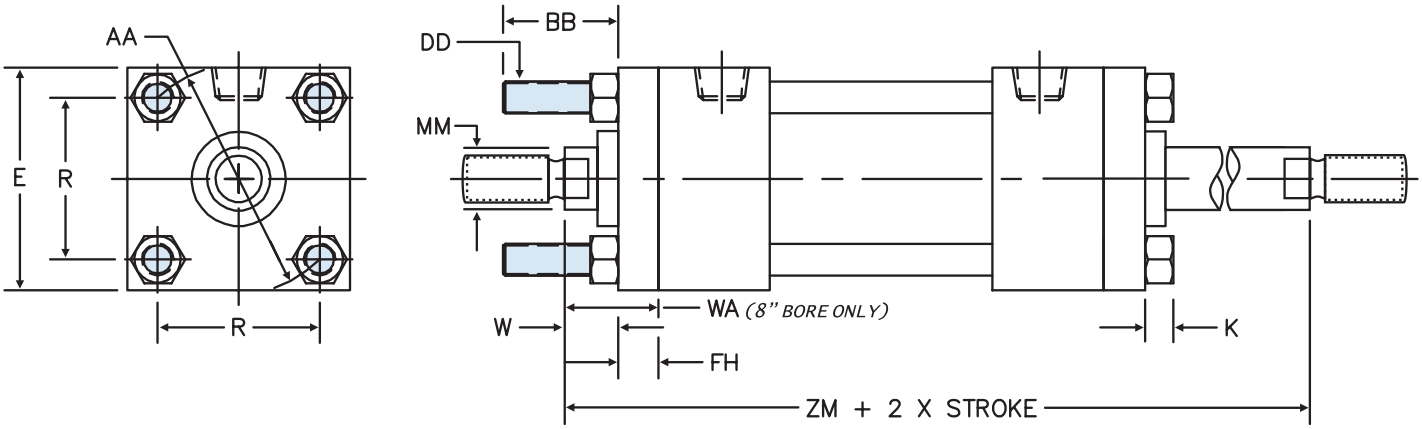

SERIES 'TAS' DIMENSIONS: DOUBLE ROD END MOUNTS

BORE	ROD DIA. (MM)	E	FH	AA	BB	DD	K	R	① RD	W or WA (8")	ADD 2X STROKE ZM
1.50	0.625	2.000	0.375	2.020	1.000	1/4 - 28	0.250	1.430	SQ	0.625	6.125
	1.000									1.000	6.875
2.00	0.625	2.500	0.375	2.600	1.125	5/16 - 24	0.313	1.840	SQ	0.625	6.125
	1.000									1.000	6.875
	1.375									1.250	7.375
2.50	0.625	3.000	0.375	3.100	1.125	5/16 - 24	0.313	2.190	SQ	0.625	6.250
	1.000									1.000	7.000
	1.375									1.250	7.500
	1.750									1.500	8.000
3.25	1.000	3.750	0.625	3.900	1.375	3/8 - 24	0.375	2.760	SQ	0.750	7.500
	1.375									1.000	8.000
	1.750									1.250	8.500
	2.000									1.375	8.750
4.00	1.000	4.500	0.625	4.700	1.375	3/8 - 24	0.375	3.320	SQ	0.750	7.500
	1.375									1.000	8.000
	1.750									1.250	8.500
	2.000									1.375	8.750
	2.500									1.625	9.250
5.00	1.000	5.500	0.625	5.800	1.813	1/2 - 20	0.438	4.100	SQ	0.750	7.750
	1.375									1.000	8.250
	1.750									1.250	8.750
	2.000									1.375	9.000
	2.500									1.625	9.500
	3.000									1.625	9.500
	3.500									1.625	9.500
6.00	1.375	6.500	0.750	6.900	1.813	1/2 - 20	0.438	4.880	SQ	0.875	8.750
	1.750									1.125	9.250
	2.000									1.250	9.500
	2.500									1.500	10.000
	3.000									1.500	10.000
	3.500									1.500	10.000
	4.000									1.500	10.000
8.00	1.375	8.500	0.625	9.100	② 2.313	5/8 - 18	0.563	6.440	3.500	1.500	8.875
	1.750		0.625						3.500	1.750	9.375
	2.000		0.625						5.000	1.875	9.625
	2.500		0.750						5.000	2.125	10.125
	3.000		0.750						5.250	2.125	10.125
	3.500		0.750						5.625	2.125	10.125
	4.000		0.750						6.500	2.125	10.125
	4.500		0.750						7.250	2.125	10.125
	5.000		0.750						7.500	2.125	10.125
	5.500		0.750						7.500	2.125	10.125

① Where SQ is shown in chart, cylinder utilizes a full square retainer.

② Round retainer used to retain bushing, not a full front plate as other bores. 'BB' is dimension from head on the 8.00" bore.

SERIES 'TAS' DIMENSIONS: DOUBLE ROD END MOUNTS

MF1D: HEAD FLANGE

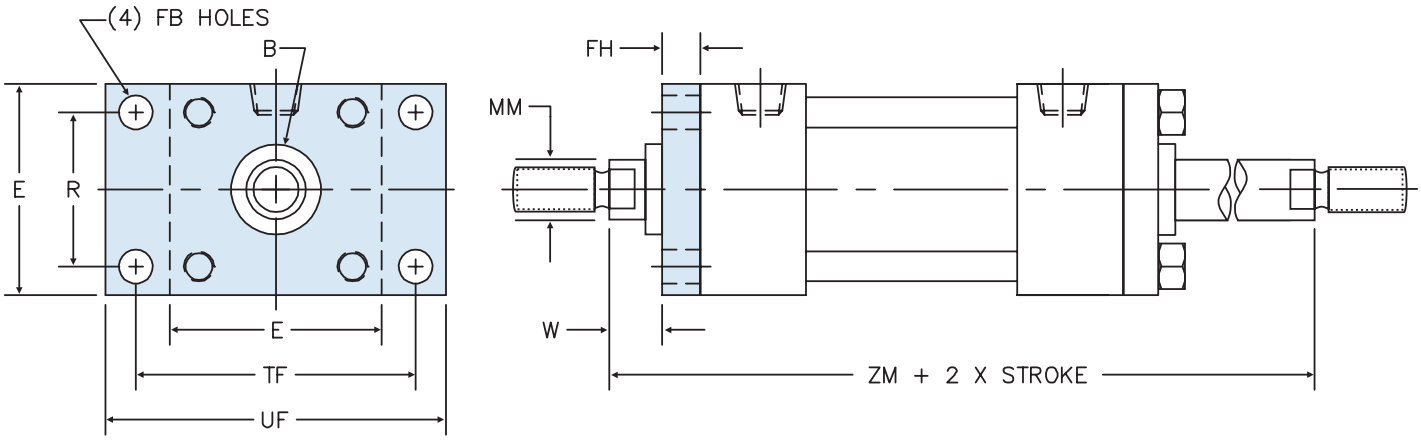

MF5D: HEAD SQUARE FLANGE

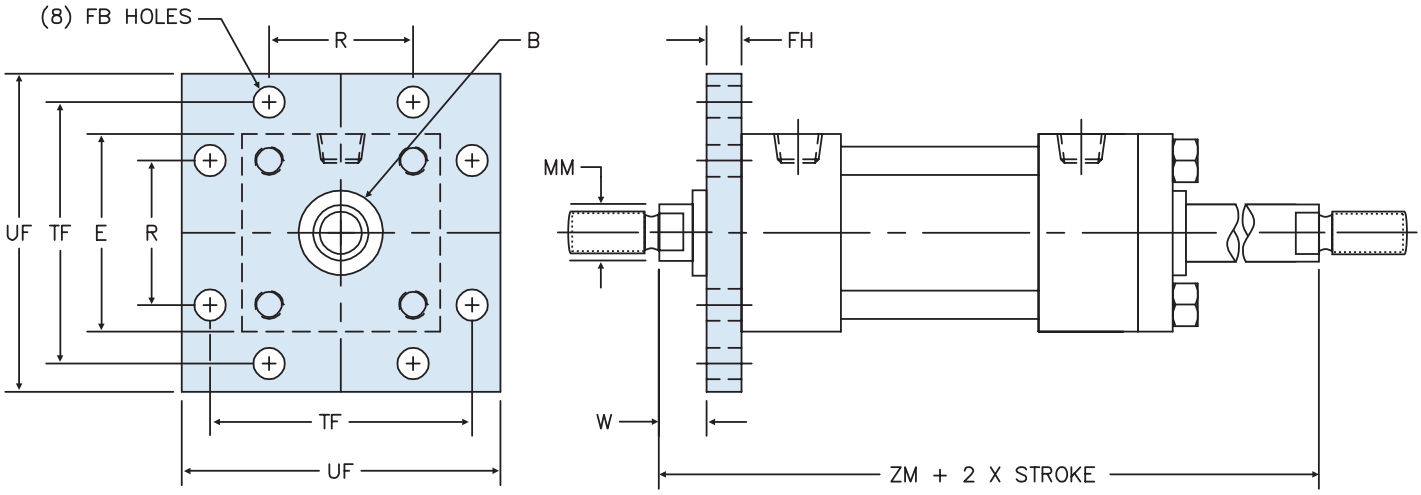

SERIES 'TAS' DIMENSIONS: DOUBLE ROD END MOUNTS

BORE	ROD DIA. (MM)	B	E	FB	FH	R	TF	UF	W	ADD 2X STROKE ZM
1.50	0.625	1.124	2.000	0.313	0.375	1.430	2.750	3.375	0.625	6.125
	1.000	1.499							1.000	6.875
2.00	0.625	1.124	2.500	0.375	0.375	1.840	3.375	4.125	0.625	6.125
	1.000	1.499							1.000	6.875
	1.375	1.999							1.250	7.375
2.50	0.625	1.124	3.000	0.375	0.375	2.190	3.875	4.625	0.625	6.250
	1.000	1.499							1.000	7.000
	1.375	1.999							1.250	7.500
	1.750	2.374							1.500	8.000
3.25	1.000	1.499	3.750	0.438	0.625	2.760	4.688	5.500	0.750	7.500
	1.375	1.999							1.000	8.000
	1.750	2.374							1.250	8.500
	2.000	2.624							1.375	8.750
4.00	1.000	1.499	4.500	0.438	0.625	3.320	5.438	6.250	0.750	7.500
	1.375	1.999							1.000	8.000
	1.750	2.374							1.250	8.500
	2.000	2.624							1.375	8.750
	2.500	3.124							1.625	9.250
5.00	1.000	1.499	5.500	0.563	0.625	4.100	6.625	7.625	0.750	7.750
	1.375	1.999							1.000	8.250
	1.750	2.374							1.250	8.750
	2.000	2.624							1.375	9.000
	2.500	3.124							1.625	9.500
	3.000	3.749							1.625	9.500
	3.500	4.249							1.625	9.500
6.00	1.375	1.999	6.500	0.563	0.750	4.880	7.625	8.625	0.875	8.750
	1.750	2.374							1.125	9.250
	2.000	2.624							1.250	9.500
	2.500	3.124							1.500	10.000
	3.000	3.749							1.500	10.000
	3.500	4.249							1.500	10.000
	4.000	4.749							1.500	10.000

SERIES 'TAS' DIMENSIONS: DOUBLE ROD END MOUNTS

ME3D: HEAD SQUARE MOUNTING HOLES

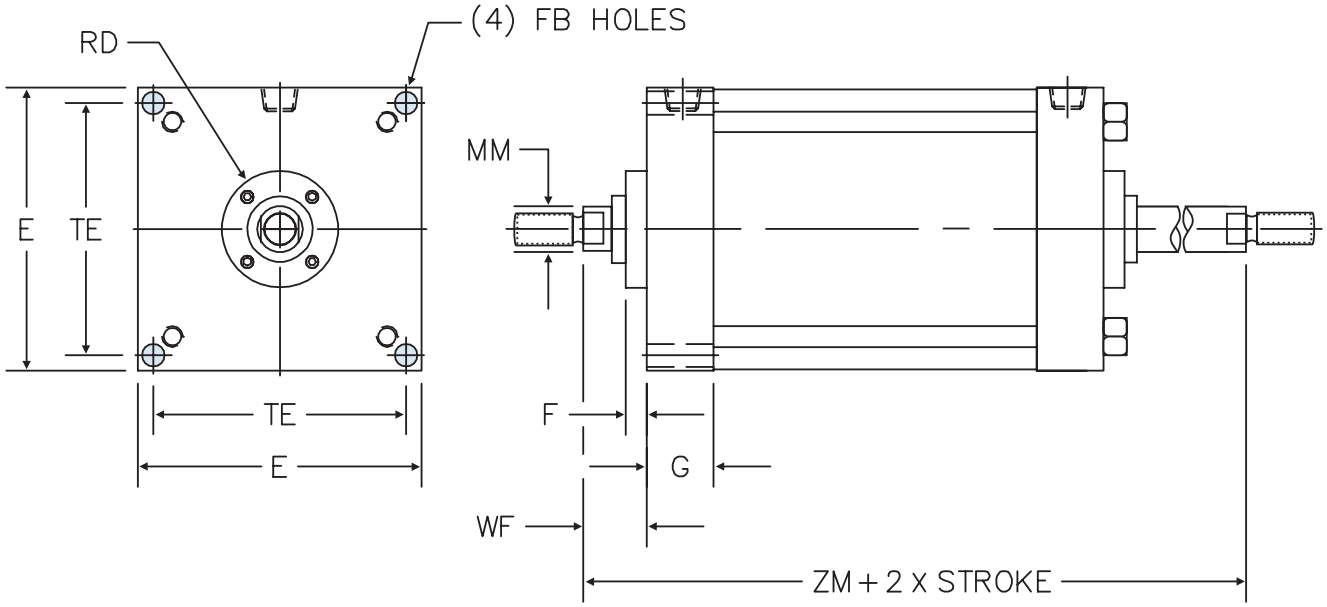

BORE	ROD DIA. (MM)	E	F	FB	G	TE	RD	WF	ADD 2X STROKE ZM
8.00	1.375	8.500	0.625	0.688	2.000	7.570	3.500	1.625	8.875
	1.750		0.625				3.500	1.875	9.375
	2.000		0.625				5.000	2.000	9.625
	2.500		0.750				5.000	2.250	10.125
	3.000		0.750				5.250	2.250	10.125
	3.500		0.750				5.625	2.250	10.125
	4.000		0.750				6.500	2.250	10.125
	4.500		0.750				7.250	2.250	10.125
	5.000		0.750				7.500	2.250	10.125
	5.500		0.750				7.500	2.250	10.125

SERIES 'TAS' DIMENSIONS: DOUBLE ROD END MOUNTS

MS1D: BASE MOUNT

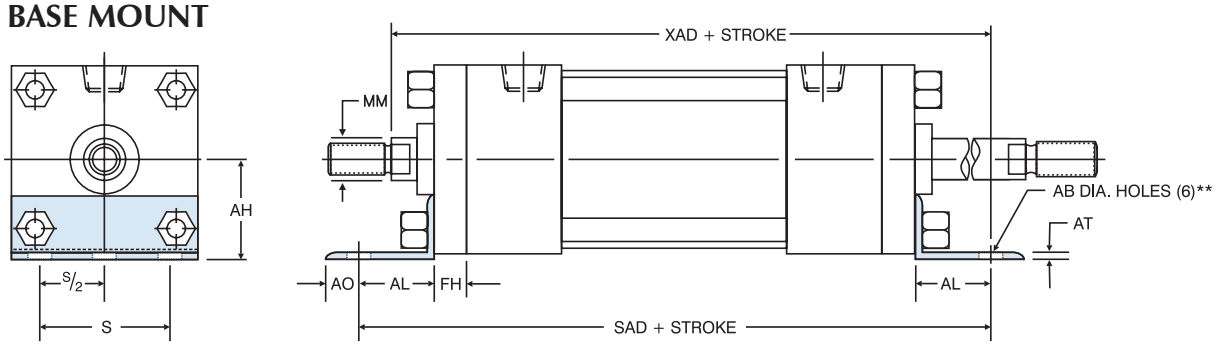

'MS1D' ANGLE MOUNT DIMENSIONS										
									ADD TO STROKE	
BORE	ROD DIA. (MM)	AB	AH	AL	AO	AT	FH	S	SAD	XAD
1.50	0.625	0.438	1.188	1.000	0.375	0.188	0.375	1.250	6.875	6.500
	1.000									6.875
2.00	0.625	0.438	1.438	1.000	0.375	0.188	0.375	1.750	6.875	6.500
	1.000									6.875
	1.375									7.125
2.50	0.625	0.438	1.625	1.000	0.375	0.188	0.375	2.250	7.000	6.625
	1.000									7.000
	1.375									7.250
	1.750									7.500
3.25	1.000	0.563	1.938	1.250	0.500	0.125	0.625	2.750	8.500	8.000
	1.375									8.250
	1.750									8.500
	2.000									8.625
4.00	1.000	0.563	2.250	1.250	0.500	0.125	0.625	3.500	8.500	8.000
	1.375									8.250
	1.750									8.500
	2.000									8.625
	2.500									8.875
5.00	1.000	0.688	2.750	1.375	0.625	0.188	0.625	4.250	9.000	8.375
	1.375									8.625
	1.750									8.875
	2.000									9.000
	2.500									9.250
	3.000									9.250
	3.500									9.250
6.00	1.375	0.813	3.250	1.375	0.625	0.188	0.750	5.250	9.750	9.250
	1.750									9.500
	2.000									9.625
	2.500									9.875
	3.000									9.875
	3.500									9.875
	4.000									9.875
8.00*	1.375	0.813	4.250	1.813	0.688	0.250	0.625	7.125	9.250	9.063
	1.750						0.625			9.313
	2.000						0.625			9.438
	2.500						0.750			9.688
	3.000						0.750			9.688
	3.500						0.750			9.688
	4.000						0.750			9.688
	4.500						0.750			9.688
	5.000						0.750			9.688
	5.500						0.750			9.688

*8.00" bore utilizes round retainer.
**1.50" bore uses (4) "AB" holes.

SERIES 'TAS' DIMENSIONS: DOUBLE ROD END MOUNTS

MS2D: SIDE LUGS

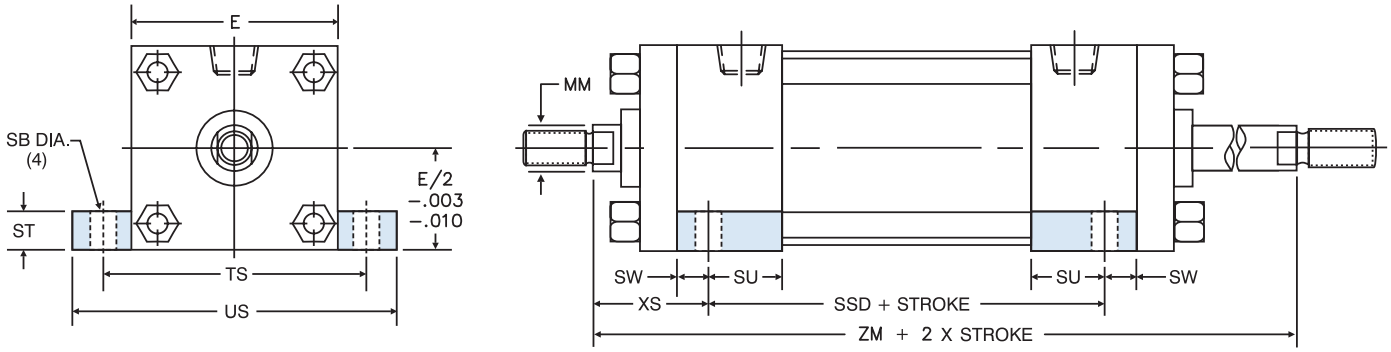

BORE	ROD DIA. (MM)	E	SB	ST	SU	SW	TS	US	XS	ADD TO STROKE SSD	ADD 2X STROKE ZM
1.50	0.625	2.000	0.438	0.500	1.125	0.375	2.750	3.500	1.375	3.375	6.125
	1.000								1.750		6.875
2.00	0.625	2.500	0.438	0.500	1.125	0.375	3.250	4.000	1.375	3.375	6.125
	1.000								1.750		6.875
	1.375								2.000		7.375
2.50	0.625	3.000	0.438	0.500	1.125	0.375	3.750	4.500	1.375	3.500	6.250
	1.000								1.750		7.000
	1.375								2.000		7.500
	1.750								2.250		8.000
3.25	1.000	3.750	0.563	0.750	1.250	0.500	4.75	5.750	1.875	3.750	7.500
	1.375								2.125		8.000
	1.750								2.375		8.500
	2.000								2.500		8.750
4.00	1.000	4.500	0.563	0.750	1.250	0.500	5.500	6.500	1.875	3.750	7.500
	1.375								2.125		8.000
	1.750								2.375		8.500
	2.000								2.500		8.750
	2.500								2.750		9.250
5.00	1.000	5.500	0.813	1.000	1.063	0.688	6.875	8.250	2.063	3.625	7.750
	1.375								2.313		8.250
	1.750								2.563		8.750
	2.000								2.688		9.000
	2.500								2.938		9.500
	3.000								2.938		9.500
	3.500								2.938		9.500
6.00	1.375	6.500	0.813	1.000	1.313	0.688	7.875	9.250	2.313	4.125	8.750
	1.750								2.563		9.250
	2.000								2.688		9.500
	2.500								2.938		10.000
	3.000								2.938		10.000
	3.500								2.938		10.000
	4.000								2.938		10.000
8.00	1.375	8.500	0.813	1.000	1.313	0.688	9.875	11.250	2.313	4.250	8.875
	1.750								2.563		9.375
	2.000								2.688		9.625
	2.500								2.938		10.125
	3.000								2.938		10.125
	3.500								2.938		10.125
	4.000								2.938		10.125
	4.500								2.938		10.125
	5.000								2.938		10.125
	5.500								2.938		10.125

SERIES 'TAS' DIMENSIONS: DOUBLE ROD END MOUNTS

MS4D: BOTTOM TAPPED HOLES

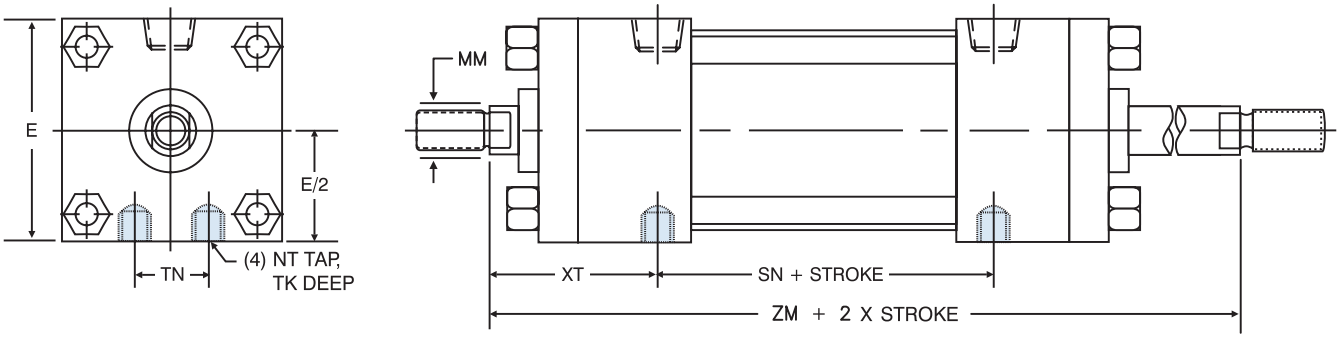

BORE	ROD DIA. (MM)	E	NT	TN	TK	XT	ADD TO STROKE SN	ADD 2X STROKE ZM
1.50	0.625	2.000	1/4 - 20	0.625	0.375	1.938	2.250	6.125
	1.000					2.313		6.875
2.00	0.625	2.500	5/16 - 18	0.875	0.500	1.938	2.250	6.125
	1.000				0.500	2.313		6.875
	1.375				0.375	2.563		7.375
2.50	0.625	3.000	3/8 - 16	1.250	0.625	1.938	2.375	6.250
	1.000				0.625	2.313		7.000
	1.375				0.438	2.563		7.500
	1.750				0.375	2.813		8.000
3.25	1.000	3.750	1/2 - 13	1.500	0.750	2.438	2.625	7.500
	1.375				0.750	2.688		8.000
	1.750				0.500	2.938		8.500
	2.000				0.500	3.063		8.750
4.00	1.000	4.500	1/2 - 13	2.063	0.750	2.438	2.625	7.500
	1.375				0.750	2.688		8.000
	1.750				0.750	2.938		8.500
	2.000				0.750	3.063		8.750
	2.500				0.625	3.313		9.250
5.00	1.000	5.500	5/8 - 11	2.688	1.000	2.438	2.875	7.750
	1.375				1.000	2.688		8.250
	1.750				1.000	2.938		8.750
	2.000				1.000	3.063		9.000
	2.500				1.000	3.313		9.500
	3.000				0.750	3.313		9.500
	3.500				0.625	3.313		9.500
6.00	1.375	6.500	3/4 - 10	3.250	1.125	2.813	3.125	8.750
	1.750				1.125	3.063		9.250
	2.000				1.125	3.188		9.500
	2.500				1.125	3.438		10.000
	3.000				1.125	3.438		10.000
	3.500				1.125	3.438		10.000
	4.000				1.000	3.438		10.000
8.00	1.375	8.500	3/4 - 10	4.500	1.125	2.813	3.250	8.875
	1.750					3.063		9.375
	2.000					3.188		9.625
	2.500					3.438		10.125
	3.000					3.438		10.125
	3.500					3.438		10.125
	4.000					3.438		10.125
	4.500					3.438		10.125
	5.000					3.438		10.125
	5.500					3.438		10.125

SERIES 'TAS' BASIC OPTIONS

Index to Options:

PAGE
- A= - Extended Piston Rod Thread 131
- AS - Adjustable Stroke (Retract) 131
- A/O - Air/Oil Piston 131
- B, BC, BH - Bumpers 131
- BP - Bumper Piston Seals 132
- BSPT/BSPP - British Standard Pipe Threads. 133
- Cushions - Head/Cap 133
- C= - Extended Piston Rod 134
- CS - Center Supports 134
- EK - Extended Key Plate 134
- KK10 - Rod Coupler End 134
- KK3S - Studded Piston Rod 134
- KKM/KK3M - Metric Rod Thread 134
- KKX/KK3X - Special Rod Thread 134
- Lubricants. 135
- LF - Low Friction Seals 136
- LT, LTE - Low Temperature Seals 136
- MA - Micro-Adjust 136
- MAB - Micro-Adjust with Urethane Bumper. 137
- MS - Metallic Rod Scraper 137

PAGE
- NR - Non-Rotating (NFPA) Cylinders 137
- OP - Optional Port Location. 137
- Optional Port & Cushion at Same Location 138
- OS - Oversize Rod 138
- PLS - Piston Lock Screw 139
- PMC - Solid Cast Iron Pistons 139
- RBB - Solid Bronze Rod Bushing 139
- SAE O-Ring Boss Ports 139
- SE - Spring Extend 140
- SR - Spring Retract 140
- SSA - Stainless Steel All. 140
- SSC - Stainless Steel Cushion Needle 140
- SSF - Stainless Steel Fasteners. 140
- SSN - Stainless Steel Tie Rod Nuts 140
- SSR - Stainless Steel Piston Rod 140
- SST - Stainless Steel Tie Rods & Nuts 140
- ST - Stop Tube 141-142
- TH - 400 PSI Hydraulic (Non-Shock) 140
- VS - Fluorocarbon Seals 140
- Uncommon Options 143-145

A= *Extended Piston Rod Thread*

"A=" refers to the length of piston rod thread.

Shorter than standard lengths can be furnished at no charge. Longer than standard lengths can be furnished at a nominal price adder.

Special length threads do not delay orders!

Note: Maximum thread length is double the standard "A" length.

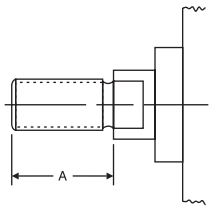

AS *Adjustable Stroke (Retract)*

Consists of a threaded rod in the cylinder cap, non-removable. Provides an adjustable positive stop on the cylinder retract.

To order, specify "AS" and length of adjustment.

(Example: AS=3")

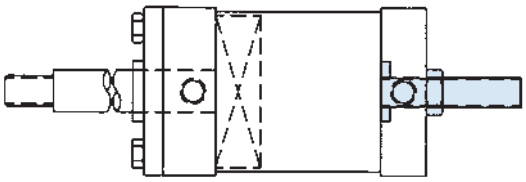

Note: Offered on standard through 2x oversized rods.

Consult factory for adjustable strokes over 12"

A/O *Air/Oil Piston*

Air/Oil pistons allow for the combination of pneumatic supply air with the precise control of oil.

The basic A/O piston is designed for oil on the cylinder cap end and a meter out flow control (not provided) for precise return stroke control.

For applications that require the oil to be on the cylinder rod end, specify the "TH" option.

Note: Due to the nature of oil to remain in the tubing finish recesses, a condition called collaring will allow oil to seep past the A/O seal over time, escaping in the air valve exhaust.

B BC BH *Bumpers*

Urethane impact dampening bumpers are used when cylinder speeds do not allow for standard cushions.

BC=Cap Bumper **BH**=Head Bumper **B**=Head & Cap Bumper
(Note: Each bumper adds .25" to cylinder length).

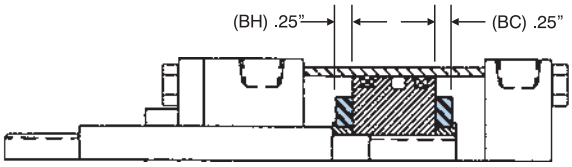

Note: Offered on standard and 1x oversized rods.

Consult factory for other offerings.

SERIES 'TAS' BASIC OPTIONS

BP *Bumper Piston Seals*

1.50" Bore Shown

Available on 1.50" to 8" Bore

TRD's bumper piston seal, when used with our advanced cushion design, decelerates the cylinder at end of stroke, reducing noise and extending cylinder life.

Standard Material: Nitrile

Operating Temp: -20°F to 200°F (-29°C to 93°C)

Optional Material: Fluorocarbon

Operating Temp: 0°F to 400°F (-18°C to 204°C)

Operating Pressure: 250 PSI Air (17 BAR)

Benefits

- Reduces Cycle Rates - Higher piston velocities can be achieved due to rapid deceleration feature, increasing productivity.
- Provides Maximum Impact Dampening - Reduces machine vibration.
- Reduces Cylinder End-of-Stroke Noise
- Available in Fluorocarbon Seals

Design Tips

- Use cushions to achieve optimum performance on longer strokes (Options HC & BP).
- Use the BP seals without cushions on short strokes requiring fast cycles.
- Due to compressibility, BP seals are not recommended for applications that require 100% repeatable stroke increments.

Bumper piston seals will shorten the cylinder stroke when operated at less than 90 PSI supply air. The charts below show the approximate (average) stroke reduction at various pressure (for new cylinders). As the cylinders are cycled, the seals will take a slight set. Tests have shown that after 1,500,000 cycles, the seals will have between .001" and .008" compression set per seal. After that, there is no noticeable compression set.

TOTAL STROKE REDUCTION
("A" DIMENSION X 2 IN INCHES)

BORE	0 PSI	10 PSI	30 PSI	50 PSI	70 PSI	90 PSI
1.50	.10	.09	.07	.06	.04	.00
2.00	.14	.11	.07	.04	.01	.00
2.50	.18	.14	.08	.05	.02	.00
3.25	.14	.12	.08	.04	.01	.00
4.00	.17	.14	.09	.05	.02	.00
5.00	.18	.14	.07	.03	.01	.00
6.00	.23	.18	.10	.05	.01	.00
8.00	.31	.26	.15	.07	.03	.00

PER END STROKE REDUCTION
("A" DIMENSION IN INCHES)

BORE	0 PSI	10 PSI	30 PSI	50 PSI	70 PSI	90 PSI
1.50	.048	.043	.035	.028	.021	.00
2.00	.069	.056	.037	.020	.010	.00
2.50	.091	.070	.042	.024	.008	.00
3.25	.071	.059	.039	.020	.002	.00
4.00	.087	.069	.045	.026	.009	.00
5.00	.092	.072	.036	.013	.005	.00
6.00	.113	.091	.051	.023	.003	.00
8.00	.154	.132	.076	.037	.016	.00

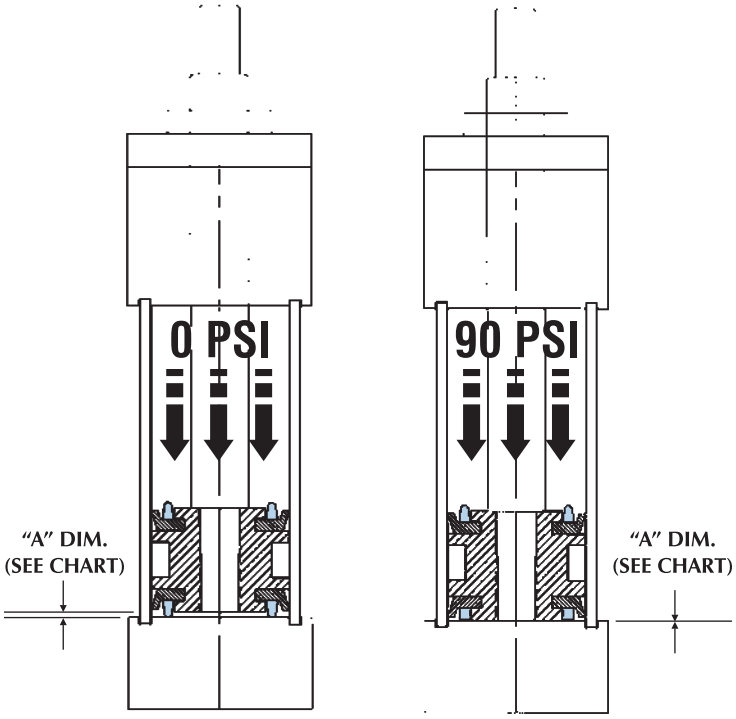

SERIES 'TAS' BASIC OPTIONS

BSPT British Standard Pipe Taper

British Standard Pipe Taper (BSPT) threads have the same taper as American NPT tapered threads, but use a 55° Whitworth thread form and different diameters (not interchangeable with NPT).

Example: BSPT=.25″

BSPP British Standard Pipe Parallel

British Standard Pipe Parallel (BSPP), also referred to as BSP Straight Thread (not interchangeable with NPT).

Example: BSPP=.25″

H C LH LC FC FCH FCC Cushions

TRD's advanced cushion design features a unique, one piece seal that is allowed to float in a precision machined groove. This type of seal design provides consistent cushion performance and maximum seal life. Oversized flow paths molded in the periphery of the seal provide full flow on the return stroke without the use of ball checks. *Note: Cylinders with a short stroke (value varies with bore/rod diameter and cushion combinations) may result in improper cylinder operation. Consult factory for availability.*

HEAD CUSHIONS

- **H** Standard Length Head Cushion
- **LH** Long Head Cushion
- **FCH** Fixed Head Cushion[1]

CAP CUSHIONS

- **C** Standard Length Cap Cushion
- **LC** Long Cap Cushion
- **FCC** Fixed Cap Cushion[1]

[1] *This is a non-adjustable cushion.*
Note: Designate FC for both fixed head and cap cushions.

HOW TO SIZE CUSHIONS FOR YOUR APPLICATION

Cylinders with air cushions provide a possible solution to destructive energies. The air cushion traps a small amount of exhaust air at the end of stroke, providing an air pocket that decelerates the load. This reduces the potentially destructive energy being transmitted to the cylinder and other components. The following is a brief explanation on how to determine the energy level of your application and determine if an air cushion can provide adequate energy absorption. *Air cushions do not build heat since the heat generated is dissipated with the exhausted air flow.*

STEP 1: Determine the total load to be stopped by the cylinder. Include the piston rod weight *(see Piston Rod Weight Chart below)*.
STEP 2: Determine the velocity (in feet per second) at which the load impacts the cylinder end caps.
STEP 3: Use the following formula to calculate the energy the cylinder generates.
STEP 4: Using the table below, select the proper cushion length. You can choose a larger bore size to increase cushion capacities.

CUSHION SIZING FORMULA:

$$Energy = \left(\frac{W}{64} \times v^2\right) + (p \times k)$$

W = Total weight of load in pounds (including piston rod)
V = Velocity (in feet per second)
P = Driving pressure in PSI (usually the air line pressure)
K = Bore constant value (see chart below for "K" values)

SIZING EXAMPLE:

How to figure the energy for a 2.50″ bore cylinder, 10″ stroke, .63″ piston rod, moving a 25 lb. load at 6 feet per second with 80 PSI air.

P=80 PSI W=26.25 lbs. V=6 FPS. K=.17

Energy = (26.25/64) X (6^2) or (36) + (80 X .17)
Energy = 28.36 ft/lbs.

The Maximum Energy Data Chart indicates that the long cushion at 38.6 max. energy value would be correct for this application.

MAXIMUM ENERGY DATA CHART

BORE	K	H or C STANDARD CUSHION SERIES MAX ENERGY (FT-LBS)	LH or LC LONG CUSHION SERIES MAX ENERGY (FT-LBS)
1.50	.06	8.2	12.8
2.00	.11	13.8	21.7
2.50	.17	24.6	38.6
3.25	.25	45.7	83.6
4.00	.38	57.3	137.1
5.00	.59	94.6	226.0
6.00	1.37	225.5	334.4
8.00	2.43	411.3	609.8

PISTON ROD WEIGHT CHART

ROD DIA.	PISTON ROD WEIGHT*
0.625	.35 lb. + .09 lb./in. of stroke
1.000	1.1 lb. + .22 lb./in. of stroke
1.375	2.3 lb. + .42 lb./in. of stroke
1.750	5.0 lb. + .68 lb./in. of stroke
2.000	6.1 lb. + .88 lb./in. of stroke
2.500	10.4 lb. + 1.39 lb./in. of stroke
3.000	20.0 lb. + 2.01 lb./in. of stroke
3.500	28.7 lb. + 2.73 lb./in. of stroke
4.000	39.2 lb. + 3.57 lb./in. of stroke
4.500	50.0 lb. + 4.52 lb./in. of stroke
5.000	60.4 lb. + 5.58 lb./in. of stroke
5.500	78.5 lb. + 6.75 lb./in. of stroke

*Double weight for double rod end cylinders.

SERIES 'TAS' BASIC OPTIONS

C= Extended Piston Rod

"C=" is commonly referred to as piston rod extension. Piston rods can be extended to any length up to 120" total piston rod length, including stroke portion. Cylinders with long "C" lengths can be mounted away from obstacles or outside hazardous environments. Extended piston rod lengths do not delay delivery.

Example: If C=0.50" then 1" rod extension is C=1.50"

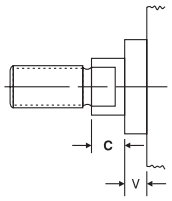

CS Center Supports

Center supports are recommended for long stroke cylinders to support tube and prevent the tie rods from sagging. Properly supported cylinders will eliminate premature cylinder wear and eliminate tie rod vibration.

Center supports can include MS2 mounts.

Contact TRD for more information.

MAXIMUM STROKE RECOMMENDATIONS			
		WITH CENTER SUPPORTS (CS OPTION)	
BORE	NO CENTER SUPPORT	ONE SUPPORT	TWO SUPPORTS
1.50", 2.00" & 2.50"	48 INCHES	OVER 48 INCHES	OVER 72 INCHES
3.25", 4.00" & 5.00"	65 INCHES	OVER 65 INCHES	OVER 92 INCHES
6.00"	72 INCHES	OVER 72 INCHES	NOT REQUIRED

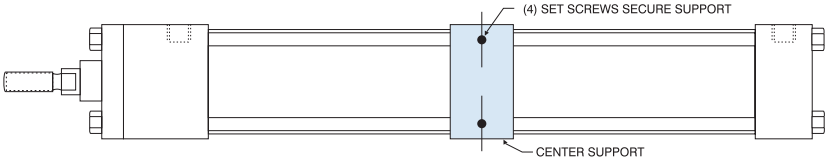

EK Extended Key Plate

Extended key plate or thrust key is made from a full square bushing retainer plate. The key is designed to fit in a milled slot on the equipment to prevent the cylinder from shifting. An additional mount needs to be specified to secure cylinder.

Available bore sizes: TAS - 1.50" to 6.00" Bore

'TAS' DIMENSIONS FOR EXTENDED KEY PLATE				
BORE	E	FA*	FH	PA*
1.50	2.000	0.312 / 0.310	0.375	0.188
2.00	2.500	0.312 / 0.310	0.375	0.188
2.50	3.000	0.312 / 0.310	0.375	0.188
3.25	3.750	0.562 / 0.560	0.625	0.313
4.00	4.500	0.562 / 0.560	0.625	0.313
5.00	5.500	0.562 / 0.560	0.625	0.313
6.00	6.500	0.687 / 0.685	0.750	0.375

*FA & PA dimensions will have a black oxide finish and will not be painted.

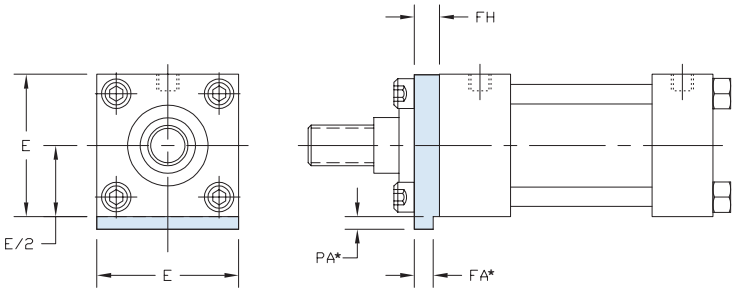

KK10 Rod Coupler End

The KK10 rod end was made popular in 3,000 PSI hydraulic applications due to its versatility and high strength. Typically, a commercially available split flange end coupler and weld plate is used to connect the cylinder directly to the work that is being performed. Refer to page 148 for KK10 accessories.

Example: TAS-MX0-2x6-KK10

KK3S Studded Piston Rod

KK3S option combines the KK3 female threaded rod end design and a case hardened stud, with permanent Loctite® When assembled, the KK3S has the same dimensions as a KK1 rod end.

This option is useful in applications that typically break standard KK1 rod ends due to high load impacting.

KKX KK3X Special Rod Thread

TRD can machine virtually any diameter and type of rod thread on the piston rod end. Standard NFPA rod threads are UNF (fine), class 2 threads. Common alternative choices are UNC (course) threads. Some uncommon thread choices are threads larger than the rod diameter. This is only possible by providing a KK3 (female) rod end and making a stud with the larger rod thread.

Example: TAS-MX0-2x6-KKX=1/2-13 UNC

Note: Unless otherwise specified, the rod thread will be standard catalog "A" dimension lengths.

Female special rod thread is also available; please specify KK3X.

KKM KK3M Metric Rod Thread

ISO 6431 is a very popular European tie rod cylinder design. Equipment that is imported from outside the U.S. will typically contain metric tie-rod cylinders. In general, ISO 6431 tie rod cylinders are not as robust as NFPA cylinder designs and some customers prefer to replace the metric cylinders with NFPA designs that will provide longer life.

Example: TAS-MX0-2x6-KKM=M10X1

TRD can provide cylinders with metric piston rod end threads to assist customers in mating replacement cylinders to existing equipment.

Female metric rod thread is also available; please specify KK3M.

SERIES 'TAS' BASIC OPTIONS

L001 *Magnalube-G Grease*

Magnalube-G Grease is our standard lubricant used for all products except for PFLF and RS Series.

Magnalube-G is a non-soap elastomer/PTFE grease designed for superior performance in a wide range of applications. Insoluble in water, Magnalube-G is a nonmigratory grease that tends to stay put in the cylinder if there is no other oil present. Note: if an FRL is used in the pneumatic system, the FRL must be properly maintained to provide continued cylinder lubrication as any oil will negate the Magnalube-G.

See www.magnalube.com for more information.

Color: Green

Recommended temperature range: -20°F to 200°F (-29°C to 93°C)

L002 *PFLF Series Standard Grease*

A perfluoropolyether based grease that is relatively low friction and is matched to perform with PFLF cylinders in PCS controlled positioning systems.

Color: White Grease

Recommended temperature range: -55°F to 300°F (-48°C to 149°C)

L003 *Low Temperature Grease*

A silicone based high performance grease that is specifically designed for extremely low temperatures. The grease will cause slight swelling in seals, which improves the sealing abilities.

Color: Pink Grease

Recommended temperature range: -85°F to 200°F (-65°C to 90°C)

L004 *Non-Conductive Grease*

A petroleum-lithium based grease developed specifically for the electrical industry. Used primarily on ultrasonic welding equipment to eliminate internal arcing and rapid metal degradation in cylinders. NLGI #1

Color: White-Light Tan Grease

Recommended temperature range: -20°F to 200°F (-29°C to 93°C)

L005 *USDA Food Grade Grease*

Primarily white mineral oil based with zinc oxide and polytetrafluoroethylene. NLGI #2 grease; recommended for all food applications. USDA approved for incidental food contact.

Color: White Grease

Recommended temperature range: 15°F to 300°F (-9°C to 149°C)

L006 *High Temperature Lube*

A silicone oil (Phenylmethyl siloxane, trimethyl-terminated) with exceptional high temperature stability and lubricating properties. Relatively low friction; 500cs viscosity.

Color: Clear Liquid

Recommended temperature range: 32°F to 500°F (0°C to 260°C)

L007 *High Vacuum Grease*

A silicone compound (Polydimethylsiloxane, silica amorphous, dimethyl siloxane, hydroxyl-terminated) stiff grease used specifically in vacuum atmospheres on heat treat furnace and silicon wafer manufacturing processes. Non melting type. Note: Additional seals will be required for vacuum service; contact TRD for assistance.

Color: White-Gray

Recommended temperature range: -20°F to 375°F (-25°C to 190°C)

L008 *RS Series Standard Grease*

USDA Food Grade grease. Synthetic based fluid with aluminum complex soap thickener type grease that is ideal for freezer applications. USDA approved for incidental food contact.

Color: White

Recommended temperature range: -60°F to 300°F (-51°C to 149°C)

L011 *EPDM Seal Lube*

A silicone (Dimethyl Siloxane Polymer) based, tacky-stiff lubricant used specifically with EPDM type special seal materials. Note: this lube is not compatible with Nitrile seals.

Color: Clear

Recommended temperature range: -40°F to 300°F (-40°C to 149°C)

L012 *Water Hydraulic Grease*

A polymer-fortified petroleum grease, PTFE additives, and high molecular weight polymers formulated to resist water washout. Used specifically for water hydraulic cylinders. NLGI #2

Color: Green

Recommended temperature range: 0°F to 300°F (-18°C to 149°C)

L013 *Low Friction Oil*

A low friction, synthetic oil offering superior extreme pressure (EP), anti-wear properties and extremely low wear rates. Designed specifically for low friction applications such as counterbalance cylinders.

Color: White-Gray Liquid

Recommended temperature range: -30°F to 300°F (-34°C to 149°C)

SERIES 'TAS' BASIC OPTIONS

LF Low Friction Seals

Low Friction (LF) option incorporates the use of round-lip, extremely low friction Carboxilated Nitrile seals. Round-lip seals hydroplane on opposed sealing surfaces and have a lower running and break-away friction.

MATERIAL: Carboxilated Nitrile
OPERATING TEMPERATURE: -20°F to 200°F (-29°C to 93°C)
OPERATING PRESSURE: 250 PSI AIR (17 BAR)

LT Low Temperature Seals

TEMP RATING: -30°F to 200°F (-34°C to 93°C)
PRESSURE RATING: 0-250 PSI Air (17 Bar); 0-400 PSI Hyd. (27.6 Bar)

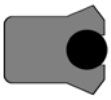

The LT option uses a special seal in the piston and rod areas to provide proper sealing and cylinder function at lower temperatures. Note: These seals will fit in standard seal grooves.

Seal Type: U-Cup, urethane seals with O-ring energizer, which functions as a spring to maintain sealing contact under low temperature applications. Unidirectional seal.

Must also specify LTG (Low Temperature Grease L003) option.

How to order LT seal kit: SK100-325-LT-LTG (1" Rod, 3.25" Bore)

LTE Low Temperature Extreme Seals

TEMP RATING: -65°F to 200°F (-54°C to 93°C)
PRESSURE RATING: 0-250 PSI Air (17 Bar); 0-400 PSI Hyd. (27.6 Bar)

The LTE option uses a special seal in the piston and rod areas to provide proper sealing and cylinder function at extremely lower temperatures. Note: These seals will fit in standard seal grooves.

Seal Type: U-Cup, urethane seals with metal expander, which functions as a spring to maintain sealing contact under extremely low temperature applications. Unidirectional seal.

Must also specify LTG (Low Temperature Grease L003) option.

How to order LTE seal kit: SK100-325-LTE-LTG (1" Rod, 3.25" Bore)

MA Micro-Adjust

- Allows precise adjustment of cylinder extend stroke
- Easy to read precision scale (.001" calibration)
- Enclosed; no pinch point design
- Available on all cylinder models with "D" double rod end option
- Up to 12" stroke and adjustment*

*Note: The adjustment range is throughout entire stroke. Consult factory for longer stroke requirements or modifications not listed.

MICRO-ADJUST DIMENSIONS					
BORE	A	B	C	D	E
1.50	1.000	1.875	3.719	1/2 - 20	0.050
2.00	1.000	1.875	3.719	1/2 - 20	0.050
2.50	1.000	1.875	3.719	1/2 - 20	0.050
3.25	1.000	2.813	3.719	3/4 - 16	0.063
4.00	0.750	2.813	3.469	3/4 - 16	0.063
5.00	0.750	2.813	3.469	3/4 - 16	0.063
6.00	0.750	3.750	3.469	3/4 - 16	0.063
8.00	0.750	3.750	3.469	3/4 - 16	0.063

Notes: Offered on standard through 2x oversized rods.
See double rod end cylinder drawings for dimensions not shown.

MICRO-ADJUST SET-UP INSTRUCTIONS:

1) Set actuator to desired stroke
2) Turn stop collar until it makes contact with stop
3) Tighten set screw
4) Tighten jam nut for positive lock of stop collar

NOTE: Do NOT apply torque to stop collar retainer bolt.

Hold stop collar by hand to tighten jam nut.

Stroke adjustments to be made while cylinder is in the retract position only.

SKETCH A

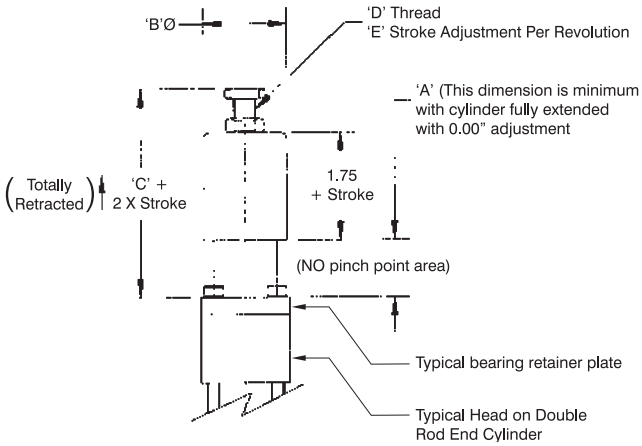

Construction: Anodized Aluminum

SKETCH B

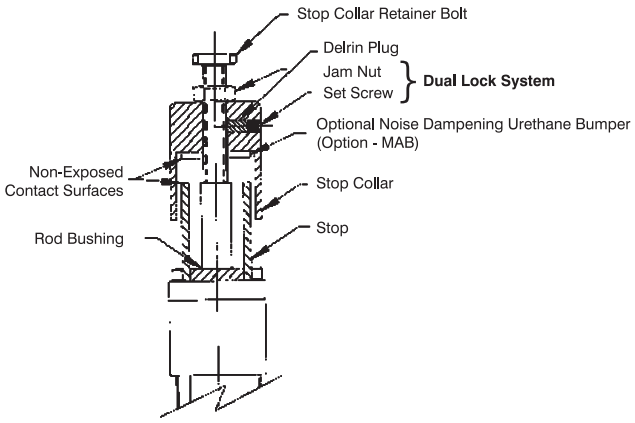

SERIES 'TAS' BASIC OPTIONS

MAB *Micro-Adjust with Urethane Bumper*

A noise dampening urethane bumper is added between the metal contact points, minimizing noise.

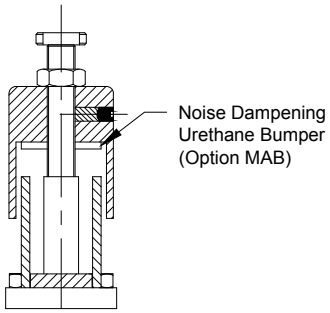

MS *Metallic Rod Scraper*

Aggressively scrapes the piston rod, removing foreign material such as spatter, sprays and powders *(brass construction).*

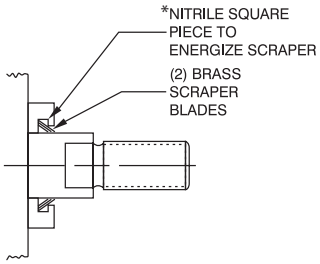

*Standard energizer will match cylinder seals.

NR *Non-Rotating (NFPA) Cylinders*

2.00" through 8.00" Bore
250 PSI Air, 400 PSI Hydraulic (Non-Shock)

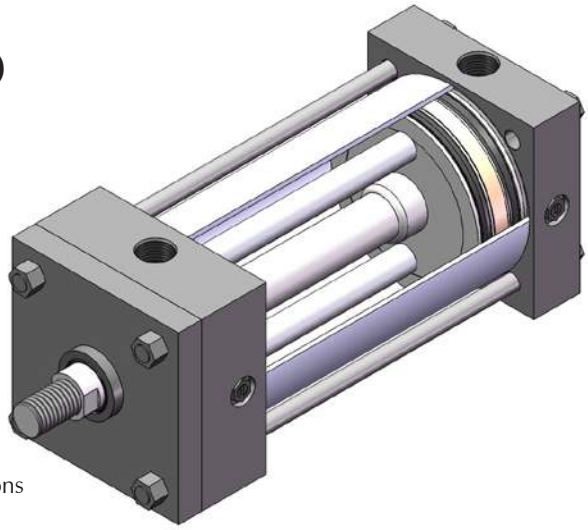

Benefits

- Two internal guide rods throughout stroke
- High repeatability at each end of stroke (+/- 1 degree)
- All external dimensions are the same as standard cylinder (no additional length or width required)
- Standard diameter guide rod seals & bronze bearings for long life and reliable operation
- Available in double rod end models

Advantages

- Eliminates the need for external guide shafts in many positioning applications
- Guide rods are internal, self-cleaning and not subjected to harsh cleaners
- Compact design saves space; no larger than standard NFPA cylinders!
- Durable, self-contained construction

Force Chart

Refer to page 164

Note: "NR" option not available in combination with "BP" bumper piston seal option.

'NR' GUIDE ROD SIZES AND MAX STROKE

BORE	ROD DIA. (MM)	CUSHIONS	GUIDE ROD DIAMETERS	MAXIMUM STROKE
2.00	0.625	Cap Only	0.250	10"
2.50	0.625	Cap Only	0.312	12"
	1.000			
3.25	1.000	Available	0.375	18"
	1.375	Cap Only		
4.00	1.000	Available	0.625	30"
	1.375			
5.00	1.000	Available	0.625	30"
	1.375			
	1.750			
	2.000			

'NR' GUIDE ROD SIZES AND MAX STROKE

BORE	ROD DIA. (MM)	CUSHIONS	GUIDE ROD DIAMETERS	MAXIMUM STROKE
6.00	1.375	Available	0.625	30"
	1.750			
	2.000			
	2.500			
8.00	1.375	Available	1.000	40"
	1.750	Available		
	2.000	Available		
	2.500	Available		
	3.000	Available		
	3.500	Cap Only		

OP *Optional Port Location*

Optional port locations can be ordered simply by calling out the location numbers:

Example: TAS-MS4-2X10-OP=2&6

Note: When optional port locations are ordered, specify both port locations, even if one port is in the standard location.

- Standard Port Positions at 1 & 5
- Standard Cushion Positions at 2 & 6
- Please specify non-standard locations when ordering.

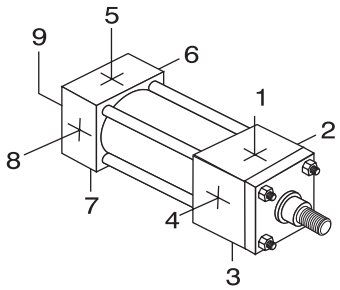

SERIES 'TAS' BASIC OPTIONS

*Optional Port and Cushion at Same Location**

Specify ports and cushions on the same cylinder side!

Ordering Examples:

TAS - MS4 - 2 X 10 - H1C5 - OP= 1 & 5
(Ports and Cushions @ 1 & 5)

TAS - MS4 - 2 X 10 - H2C6 - OP= 2 & 6
(Ports and Cushions @ 2 & 6)

TAS - MS4 - 2 X 10 - H1C6 - OP= 1 & 6
(Ports @ 1 & 6, Cushions @ 1 & 6)

Note: When optional port & cushion locations are ordered. Specify **both** port & cushion locations, even if a port or cushion is in the standard location.

*Please consult factory for availability on other rod sizes.

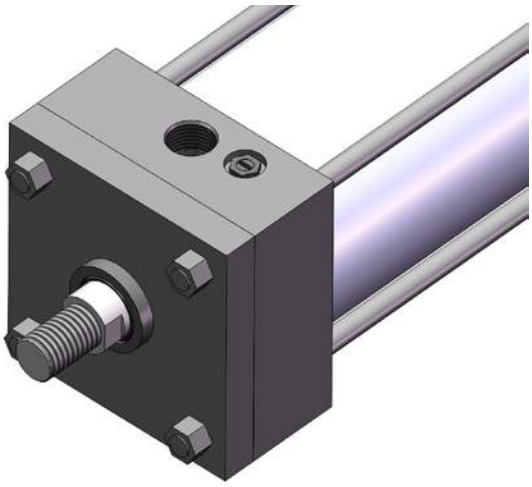

BASIC DIMENSIONS:

HEAD VIEWS

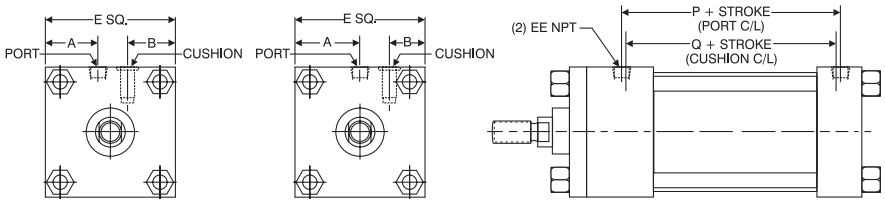

FIGURE #1 FIGURE #2

CAP VIEWS

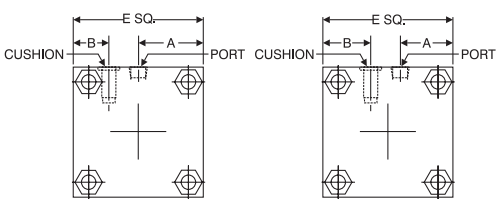

FIGURE #2 FIGURE #1

BORE	ROD DIA. (MM)	FIGURE	A	B	E	P	Q	EE NPT
1.50	0.625	1	0.750	0.625	2.000	2.375	2.125	1/4
	1.000	N/A	N/A	N/A	N/A			
2.00	0.625	1	0.875	0.938	2.500	2.375	2.125	3/8
	1.000	1	1.000	0.750	2.500			
2.50	0.625	1	1.125	1.125	3.000	2.500	2.250	3/8
	1.000	1	1.125	1.000	3.000			
3.25	1.000	1	1.500	1.375	3.750	2.750	2.500	1/2
	1.375	2	1.875	1.000	3.750			
4.00	1.000	2	2.250	1.250	4.500	2.750	2.500	1/2
	1.375	2	2.250	1.125	4.500			
5.00	1.000	2	2.750	1.750	5.500	3.000	3.000	1/2
	1.375	2	2.750	1.625	5.500			
6.00	1.375	2	3.250	1.875	6.500	3.250	3.000	3/4
	1.750	2	3.250	1.875	6.500			
8.00	1.375	2	4.250	2.750	8.500	3.375	3.125	3/4
	1.750	2	4.250	2.750	8.500			

OS *Oversize Rod*

Applications requiring long strokes may require oversize piston rod diameters to prevent sagging or buckling. To determine the recommended rod diameter, refer to Chart 3 on page 142.

Example: TAS-MS4-2X10-OS=1.375

OVERSIZED PISTON ROD STANDARD PISTON ROD

SERIES 'TAS' BASIC OPTIONS

PLS Piston Lock Screw *(For higher shock load applications)*

Cylinders are able to develop high forces and can also be subjected to severe shock loads in demanding applications due to piston-to-end cap impact. The Piston Lock Screw (PLS) acts as a shear pin between the piston and rod threads, eliminating any chance of a piston coming loose from the rod.

All TRD cylinders use a specified torque with a permanent anaerobic thread lock/sealant to secure pistons to the piston rod; threads are then staked. This standard connection method has proven to be very effective in almost all applications. However, in severe shock load applications, the PLS option provides a 100% positive connection that cannot come apart.

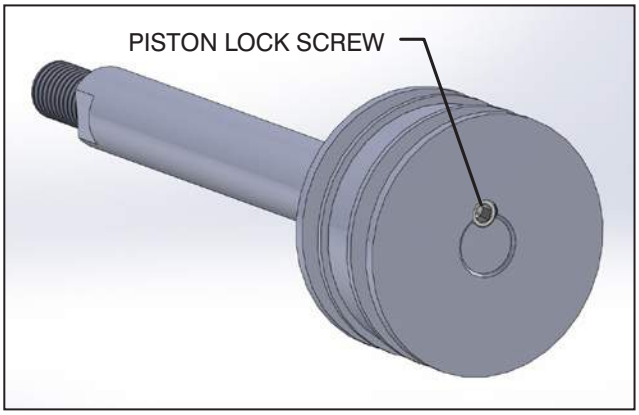

PMC Solid Cast Iron Pistons

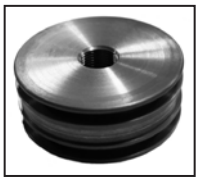

Solid cast iron pistons are standard in the 'HH' and 'MH' series. They can be ordered as an option for any other TRD series. Not suitable for use with an aluminum tube; we recommend that cast iron pistons are only used with a steel tube.

The most common use is to provide a more heavy-duty cylinder design in tough applications having higher side loads and/or higher impact loads.

RBB Solid Bronze Rod Bushing

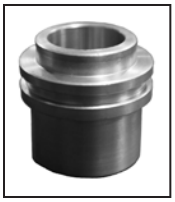

Our standard floating rod bushing design is used in conjunction with solid SAE 660 bronze material. Material specifications: 20,000 PSI compressive strength.

Some customers prefer to use bronze rod bushings. Most common uses are in water hydraulic applications.

Note: Since the mechanical properties of bronze is much lower than cast iron, bronze rod bushings typically do not provide the same long life that our standard PTFE coated cast iron rod bushings provide.

Specials: TRD can provide special length rod bushings; contact your local distributor for details

SAE SAE O-Ring Boss Ports (SAE J514)

SAE ports can be ordered in place of NPT ports.

Order by SAE number.

Example: SAE=6

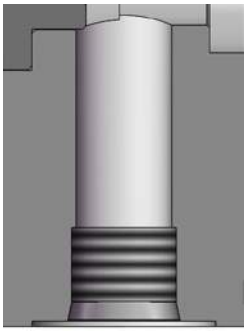

RECOMMENDED SAE PORT SIZE BY CYLINDER BORE			
BORE	SAE PORT WITH CUSHION	BORE	SAE PORT WITHOUT CUSHION
1.50	#6 (9/16-18)	1.50	#6 (9/16-18)
2.00	#6 (9/16-18)	2.00	#6 (9/16-18)
2.50	#6 (9/16-18)	2.50	#6 (9/16-18)
3.25	#8 (3/4-16)	3.25	#10 (7/8-14)
4.00	#8 (3/4-16)	4.00	#10 (7/8-14)
5.00	#8 (3/4-16)	5.00	#10 (7/8-14)
6.00	#10 (7/8-14)	6.00	#10 (7/8-14)
8.00	#12 (1 1/16-12)	8.00	#12 (1 1/16-12)

SERIES 'TAS' BASIC OPTIONS

SE Spring Extend (1.50" - 2.50" Bore)

"SE" Option is designed to provide a spring bias to extend cylinder in the event of air pressure loss.

Springs add length to cylinder and provide a modest amount of extend spring force. *See chart below for application design specs.*

Note: Cylinders are furnished with standard head and cap.

1.50", 2.00" AND 2.50" BORE SPECS*			
STROKE (IN.)	OVERALL LENGTH ADDER FOR "SE" OPTION (IN.)	SPRING RATE (LBS. PER IN.)	SPRING FORCE AT FULL EXTEND (LBS.)
0.500	0.625	18	16
1.000	0.875	12	13
1.500	1.125	9	12
2.000	1.375	7	11
2.500	1.500	7	12

***Only available on 0.625" and 1.000" rods. Consult factory for other bores, rods and forces.**
Note: Spring rates are for reference only; actual rates may vary from spring to spring.

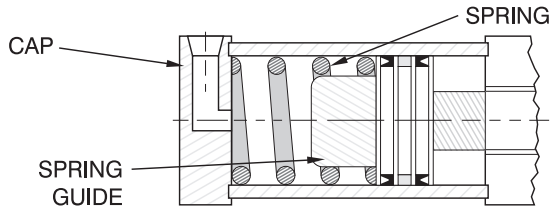

SR Spring Retract (1.50" - 2.50" Bore)

"SR" Option is designed to provide a spring bias to retract cylinder in the event of air pressure loss.

Springs add length to cylinder and provide a modest amount of retract spring force. *See chart below for application design specs.*

Note: Cylinders are furnished with standard head and cap.

1.50", 2.00" AND 2.50" BORE SPECS*			
STROKE (IN.)	OVERALL LENGTH ADDER FOR "SR" OPTION (IN.)	SPRING RATE (LBS. PER IN.)	SPRING FORCE AT FULL RETRACT (LBS.)
0.500	0.750	18	16
1.000	1.000	12	13
1.500	1.500	9	12
2.000	1.500	7	11
2.500	1.625	7	12
3.000	2.500	6	10
3.500	3.000	6	10
4.000	3.250	6	10
4.500	3.750	6	9
5.000	4.000	6	9
5.500	4.000	5	8
6.000	4.000	5	8

***Only available on 0.625" and 1.000" rods. Consult factory for other bores, rods and forces.**
Note: Spring rates are for reference only; actual rates may vary from spring to spring.

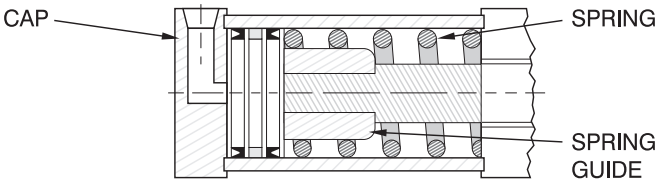

Stainless steel components provide corrosion resistance. Customize your cylinder by choosing from stainless steel fasteners, piston rod or tie rods and nuts. Refer to Series 'SS' for a complete stainless steel solution.

SSA Stainless Steel Piston Rod (Hard-Chrome Plated), Stainless Steel Fasteners, Stainless Steel Tie Rods & Nuts

SSF Stainless Steel Fasteners (Bushing Retainer Screws)

SSR Stainless Steel Piston Rod (Hard-Chrome Plated)

SST Stainless Steel Tie Rods and Nuts

SSC Stainless Steel Cushion Needle (External Adjustment Components)

SSN Stainless Steel Tie Rod Nuts

TH 400 PSI Hydraulic (Non-Shock)

Rating: 400 PSI Hydraulic, Non-Shock

Seals:
Piston Seals - (1) Poly-Pak, (1) Square-lip
Rod Seal - Poly-Pak

Many other seal materials are available. Contact TRD for proper seal material selection in tough applications or environments.

VS Fluorocarbon Seals

Benefits of Fluorocarbon Seals:

- Higher temperature performance 0°F to 400°F (-18°C to 204°C)
- Higher chemical resistance (resists most wash down solutions)

Many other seal materials are available. Contact TRD for proper seal material selection in tough applications or environments.

SERIES 'TAS' BASIC OPTIONS

ST *Stop Tube and Rod Size Selection*

Stop tubes are designed to reduce the piston rod bushing stress to within the designed range of the bearing material. This will ensure proper cylinder performance in any given application. Stop tubes lower the cylinder bearing stress by adding length to the piston, which increases the overall length of the cylinder (note: TRD uses a double piston design when possible).

STOP TUBE SELECTION

To determine the proper amount of stop tube for your application, you must first find the value of "D", which represents the stroke (*adjusted for mounting condition)*. Each mounting condition creates different levels of bushing stress, which has direct impact on the amount of stop tube required (see Chart 1).

Once the value of "D" is known, refer to Chart 2 for the recommended amount of stop tube.

TO ORDER A STOP TUBE

- Add the stop tube prefix "ST=" and the stop tube length to the cylinder model number.
- Add "ES" after the cylinder stroke to indicate that the stroke is the effective stroke.

EXAMPLE

TAS - MP1 - 3.25 x 40 ES - ST = 2

Chart 1

Find the value of "D" for your application

"D" = Stroke, adjusted for mounting condition
"S" = Actual cylinder stroke
"T" = Axial thrust (refer to Chart 3)

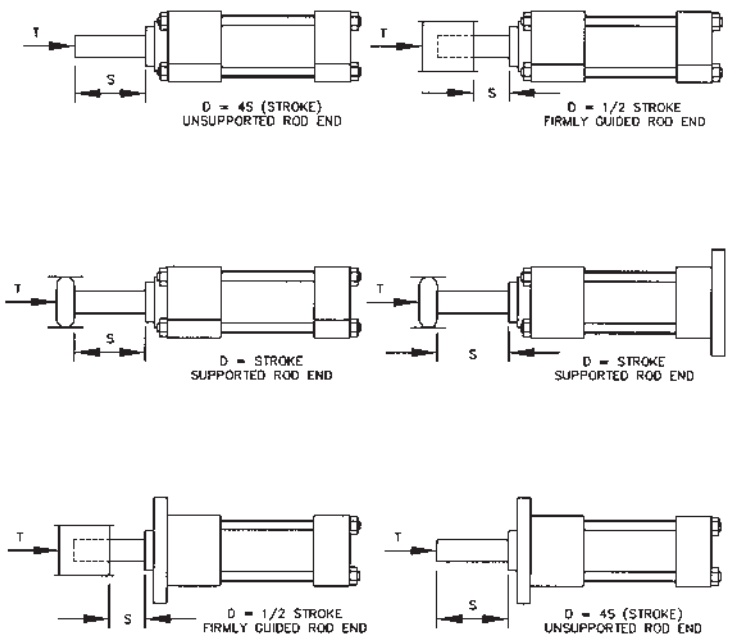

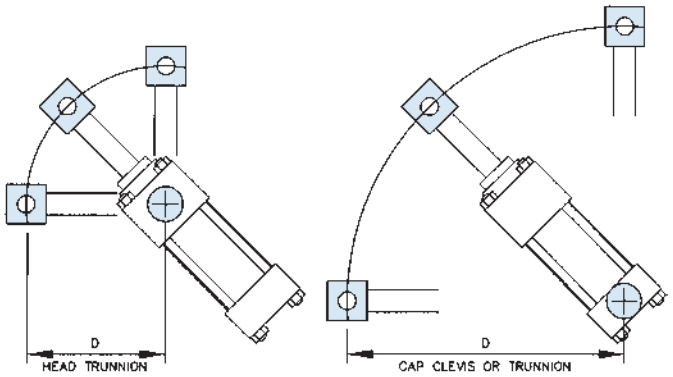

Note: Measure "D" when cylinder is fully extended.

Chart 2

Using the value of "D", find the recommended amount of stop tube

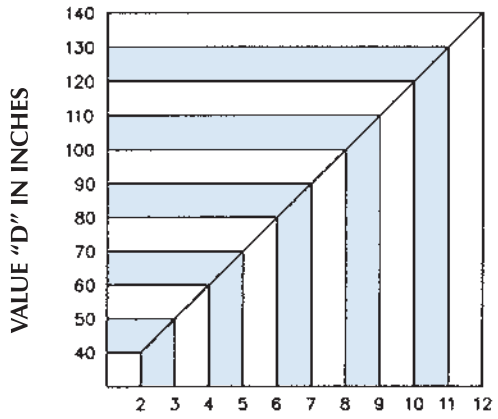

Piston Rod Size Selection

Standard rod sizes are usually suitable for shorter stroke applications at lower air pressures. With high thrust force or long stroke applications, you must check the column strength of the rod in the mounting style to determine the proper rod diameter size.

1. Determine the total axial thrust by multiplying the bore area size (in inches) by the operating pressure (in PSI).
2. Determine the value of "D" for the application.
3. Find the value of "D" in the chart below. Follow the value of "D" vertically on the graph until it intersects with the axial thrust value of the cylinder. The intersection of these two values will fall within one of the shaded areas representing the piston rod diameter size required for the application.

Chart 3 (Piston Rod Diameter Selection)

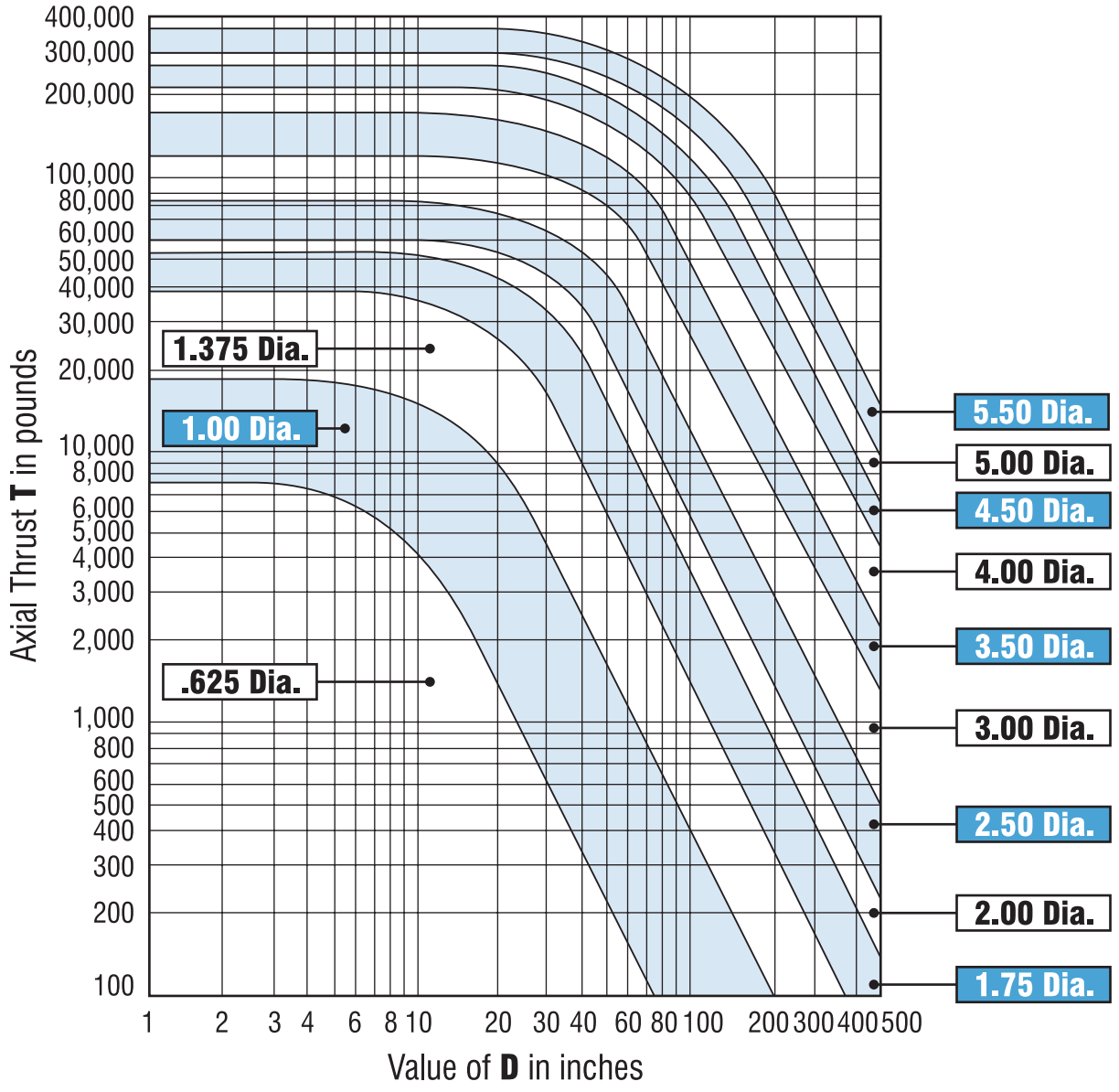

SERIES 'TAS' UNCOMMON OPTIONS

ABP= Air Bleed Ports

Air bleeds can be provided at either or both ends of the cylinder. Air bleeds should be located at the highest point in the cylinder for maximum effectiveness. The location needs to be specified, similar to port locations. Plugged from factory.

Example: ABP=15

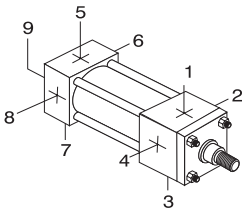

Location 9 is center of cap face.

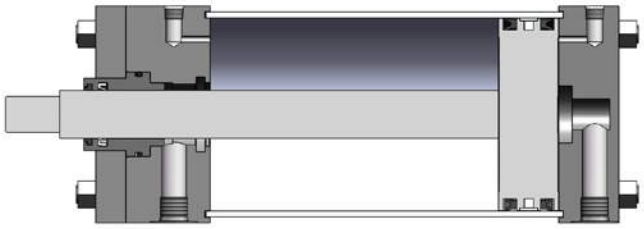

AS3POS Adjustable Mid Stroke (3-Position)

Double piston design allows for adjustment of the mid stroke position. Three ported cylinder with adjustable stop collar. To order, specify AS3POS and length of adjustment.

Example: AS3POS=4"

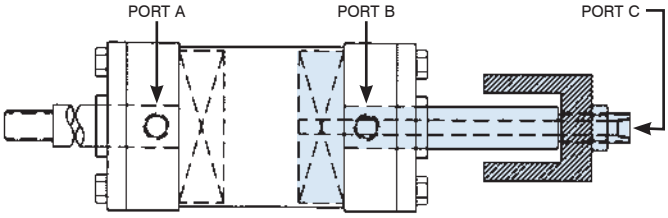

BTB Back-To-Back Cylinders

Back-to-Back cylinders consist of two individual cylinders built as one unit. These cylinders can act as a four position cylinder.

Contact TRD for more information.

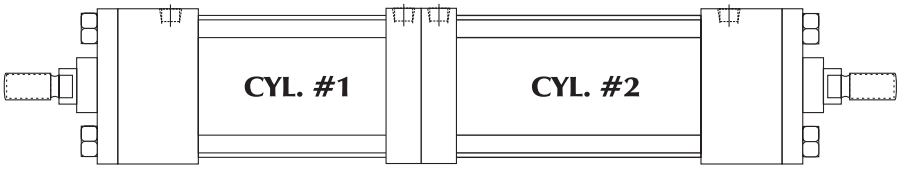

DAS Double Rod Adjustable Stroke (Extend)

Consists of a double rod end cylinder and an adjustable stop collar. Used to adjust the extend cylinder stroke.

Example: DAS=4"

Contact TRD with your specifications.

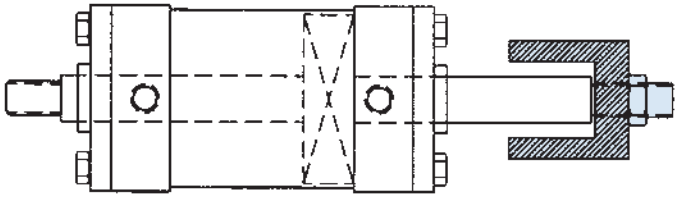

ELH ELC Extra-Long Head Cushions (ELH) and Extra-Long Cap Cushions (ELC)

ELH and ELC add length to the cylinder. Refer to the chart below for dimensions.

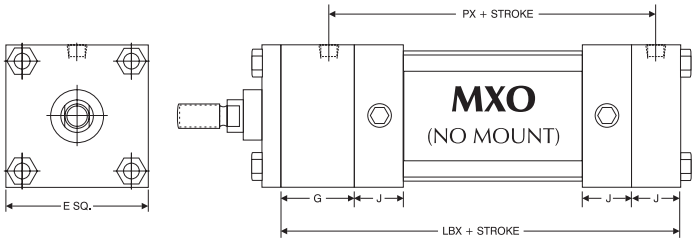

DIMENSIONS "MX0' STANDARD & OVERSIZE RODS					
BORE	E	G	J	LBX	PX
1.50	2.000	1.500	1.000	5.625	4.375
2.00	2.500	1.500	1.000	5.625	4.375
2.50	3.000	1.500	1.000	5.750	4.500
3.25	3.750	1.750	1.250	6.750	5.250
4.00	4.500	1.750	1.250	6.750	5.250
5.00	5.500	1.750	1.250	7.000	5.500
6.00	6.500	2.000	1.500	8.000	6.250
8.00	8.500	2.000	1.500	8.125	6.375

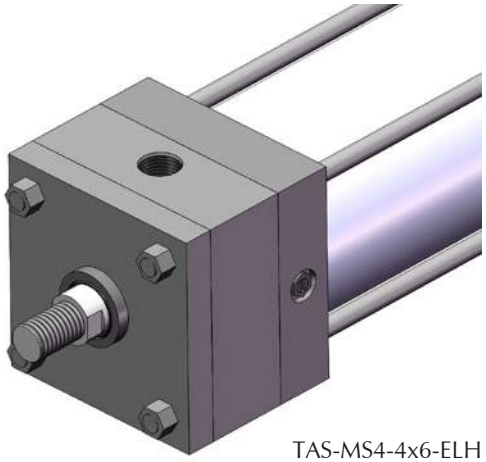
TAS-MS4-4x6-ELH

SERIES 'TAS' UNCOMMON OPTIONS

EN *Electroless Nickel*

Electroless Nickel (EN) plating is often used within aircraft landing gear, automotive brake cylinder and components, fuel injector parts, gas turbine parts, spray nozzles for chemical applications and many electronic devises including hard drives.

The properties of EN contribute to the multitude of uses. The coating provides an attractive finish while exhibiting high abrasion and corrosion resistance. Its ability to uniformly coat blind holes, threads, internal surfaces and sharp edges contributes to its effectiveness. It has a very high bonding strength to the base metal (100,000-200,000 PSI); so much so that gas turbines use EN plating as a base to braze broken blades.

EN CYLINDER SPECIFICATIONS:

EN PLATED PARTS:

Head, Cap, Bushing Retainer, Mounts (excluding MT1/MT2, which is hard chrome plated stainless steel).

OTHER COMPONENTS:

300 Series Stainless Steel: Tube, Tie Rods & Nuts, Retainer Screws, Piston Rod (hard chrome plated), Rod Bushing with PTFE Wear Band and Rod Wiper (optional: SAE 660 Bronze Rod Bushing).

EN PLATING SPECIFICATIONS:

HIGH PHOSPHORUS (highest corrosion resistant EN plating available)

COMPOSITION: 87-90% Nickel, 10-13% Phosphorus

HARDNESS: Rc 46-48

THICKNESS: .0005"-.0007"

LUBRICITY: Excellent (Similar to chrome)

COEFFICIENT OF FRICTION: Low

FINISH: Bright and very smooth

PART NUMBER EXAMPLE: TAS - MS4 - 2 x 10 - EN

EXTRA WIDE MULTIPLE WEAR BANDS

TRD can provide special wear band designs for higher side load applications. Piston widths can be increased to accommodate wider wear bands or multiple wear bands for increased performance. Note: Special wear band widths will increase the overall cylinder length.

8" Piston with two 1" wide wear bands shown.
(Special piston thickness shown; adds length to cylinder)

HOLLOW PISTON RODS

This cylinder shows a multitude of options:

Double Oversize Piston Rod, Gun-Drilled, Double Rod End with rod extension, special female rod thread, and special side drilled angle hole in piston rod.

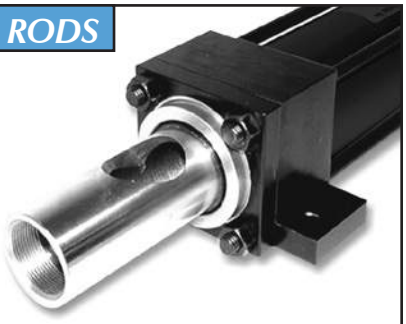

Contact TRD for rod column strength limitations and more information.

MANIFOLD BLOCK OR PLATE

For OEM's, TRD can design and provide custom made manifolds in high quantity.

Contact TRD with your specifications.

MPR MPH *Magnetic Piston*

Magnetic Pistons (MPR) are used in conjunction with TRD R10, R10P, RHT, RAC Reed and MSS Solid State Switches.

Magnetic Pistons (MPH) are used with TRD old style HE011, HE03SK and HE04SC Hall Effect Switches **Only**.

Note: Must be used with Aluminum (TMA) or Stainless Steel (TMSS) tube material.

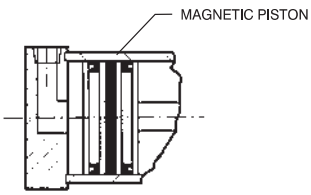

PAINT & OTHER SPECIAL FINISHES

Standard Finish: Black Urethane Paint (indoor/outdoor use)

Optional Paint: Black Epoxy Paint (indoor use only)

Additional Paint Choices: TRD can provide paint in any color or type.

Additional Finishes: TRD can provide special finishes, i.e., Nutride Plate

Heavy Chrome Plated Piston Rods.

Contact TRD with your specifications for a quote.

SERIES 'TAS' UNCOMMON OPTIONS

ROD BOOTS

Rod Boots are common in dirty environments, which is a standard specification for many applications.

Note: Rod boots add length to cylinder rod extension; contact TRD for specifications.

TM Tandem Cylinders

You can tandem two different cylinders together to create unlimited design possibilities.

Note: Piston rods are connected.

Contact TRD for more information.

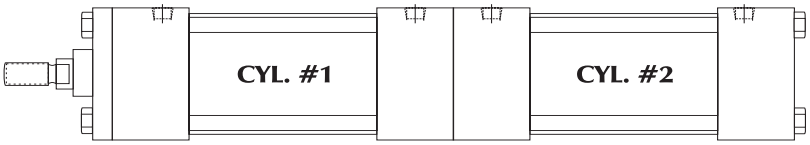

3P Three-Position Cylinder

You can create a Three-Position (3P) cylinder from two of the same bore size cylinders.

3P cylinders consist of multiple cylinders built as one unit having one exposed working rod end, capable of delivering three rod positions.

THREE-POSITION BENEFITS:

- **THREE POSITIONS IN ONE CYLINDER —** One cylinder produces three different rod end positions. By varying stroke lengths, a multitude of positions can be created.
- **SIMPLIFIES MACHINE DESIGNS —** Eliminates the need for an additional cylinder to create a third position. 3P cylinders reduce space and the cost to mount multiple cylinders.

Note: Piston rods are not connected.

Contact TRD for more information.

HOW THREE-POSITION CYLINDERS WORK

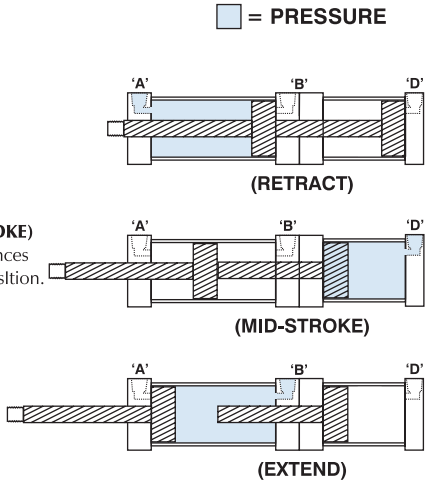

TMA TMSS Tube Materials - Aluminum & Stainless Steel

Since TRD uses the exact same design for our basic TA, FM, TD, SS and TAS Series, cylinder component materials can be easily substituted from series to series. The TMA and TMSS options can be ordered on any series for increased corrosion resistance or to be used with our magnetic piston options (MPR/MPH).

Stainless steel cylinder tubes have the same wall thickness as the aluminum tubes in TRD's standard product lines. The stainless steel tubing I.D. is stainless steel (not hard chrome plated) and is honed to close tolerances. The aluminum tubing I.D. is hard coated for wear resistance and extended cycle life.