ORIGINAL LINE ELECTRIC®

12 Product Features

12 Features and Benefits

13 How it Works

13 Materials of Construction
13 Definitions

14 How it's Used

14 Application Ideas
14 Target Applications
14 Drive Options
14 Advantages

15 How to Specify

15 Specifications and Sizing (No Motor)
15 Sizing Your Actuator and Specifying the Right Motor
18 Stepper Motor and Motor/Drive Options
19 Specifications and Sizing: DC Stepper Motors
22 Specifications and Sizing: DC IntelliMotor®
24 Specifications and Sizing: AC Stepper Motors
25 Specifications and Sizing: Reverse Parallel Motor Options
28 Dimensions
31 Motor Compatibility Chart

33 How to Accessorize

35 How to Order

36 Incompatible Options

37 How to Customize

37 Common Customizations

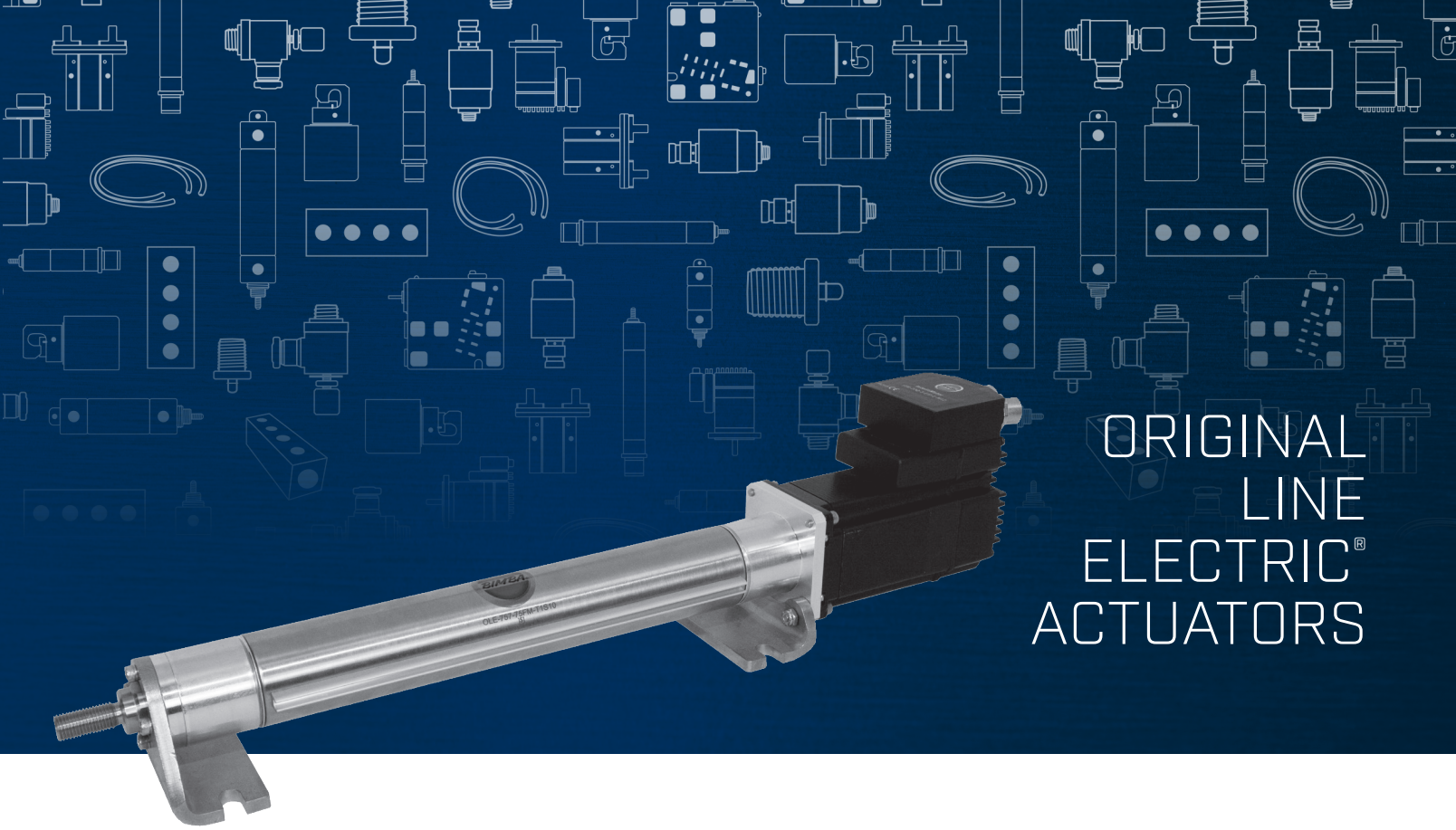

ORIGINAL LINE ELECTRIC® ACTUATORS

Bimba's Original Line Electric® (OLE) Actuators were Bimba's first electric actuator product family within the Bimba electric portfolio. Designed to mimic the legacy Bimba Original Line® (OL) pneumatic cylinder, the OLE was designed, built, and tested to provide electric positioning capability with long life, great durability, and the greatest thrust per dollar. Ideal for use when application demands are modest but where high reliability and configurability are maintained, all within even the tightest budget constraints, the OLE offers performance that is unmatched by its closest rival.

PRODUCT FEATURES

Bimba Original Line Electric® actuators provide the greatest feature set, versatility, and performance at a price you can afford.

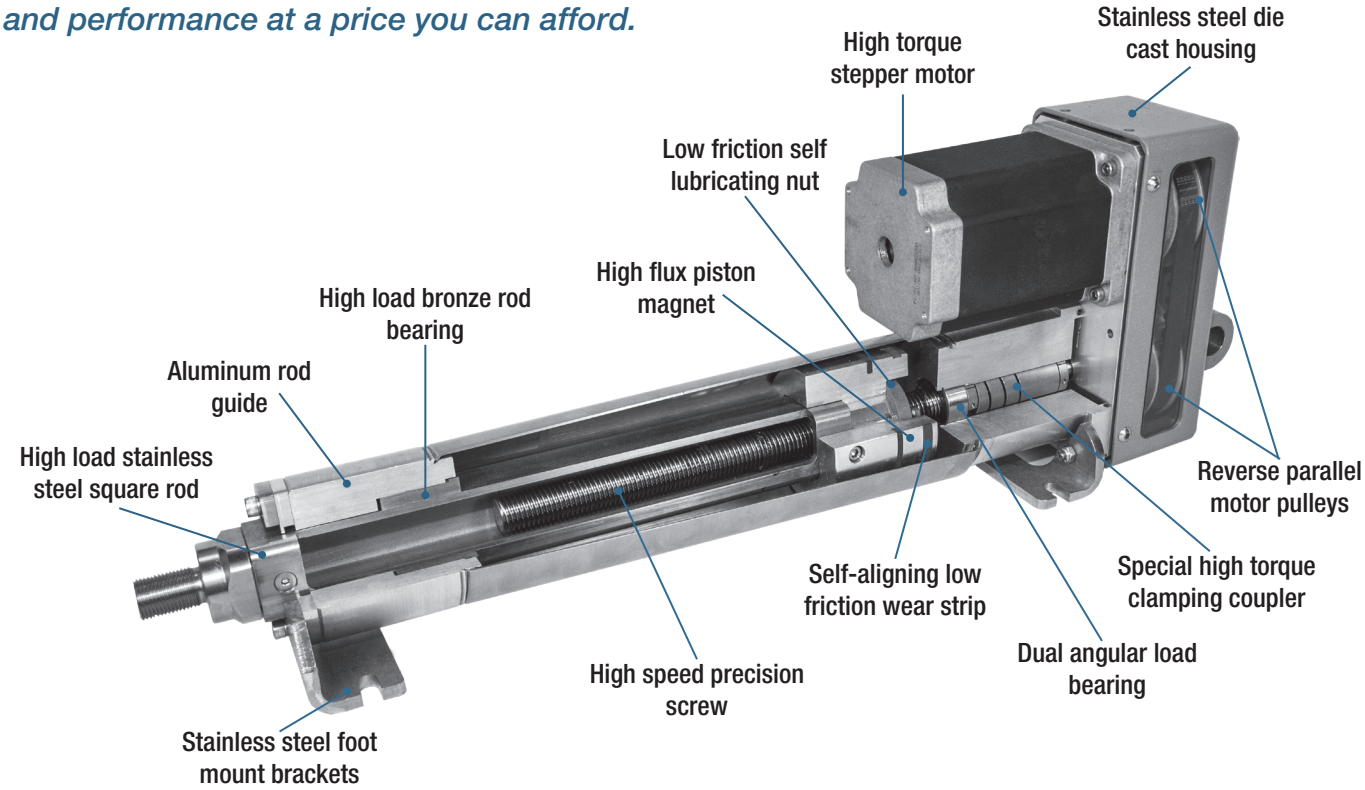

Original Line Electric® (OLE) actuators are alternatives to pneumatics where plant air quality, compressor availability, portability, and precise control and positioning are needed.

The model above is OLE-3508-20S-P3W; 350 series, 8 inch stroke, reverse parallel motor mount, 0.20 inch lead. The self locking thread holds the rod in position, even with no power to the motor. Using a 34-frame stepper, the actuator is capable of about 350 pounds thrust at 1 inch/second, or 50 pounds at about 6 inches/second. Two other leads enable speeds up to 24 inches/second.

FEATURES AND BENEFITS

- Modular design
- Special screws
- Special composite nuts
- Special custom motor couplers
- Reverse parallel motor mount
- Square rod
- Massive bronze rod bearing and low friction piston wear strip
- Dual angular load bearing
- Order exactly what you need: actuator, motor, and drive, actuator and motor, or actuator only
- High speeds, high precision, and enables longer standard strokes
- High efficiency, high load capacity, high speed, and low noise
- High torque and moment load capacity, corrects axial misalignment of the screw and motor shaft
- Allows rear pivot or clevis mount and saves space
- Prevents rotation and with the bronze rod bearing, provides high durability and side load capacity
- Provides side load capacity
- Absorbs axial loads to protect the motor

Bimba's Original Line Electric® Actuators are designed, built, and tested to provide the longest life, greatest durability, highest speed, and greatest thrust per dollar. They are ideal for applications requiring greater control for enhanced flexibility. OLE actuators can adapt to applications that utilize our Original Line pneumatic cylinders, and are available without motors (sized for steppers or servos), with integral DC stepper motors, AC stepper motors, integrated motors, and also with matching AC and DC drives.

Many popular standard features and options are available. If you need a special design feature or special adaptation, call on our custom solutions and specials design capabilities for the right product for your application. Bimba looks forward to serving your electric actuator needs with the responsiveness and engineering expertise you have come to expect from Bimba.

Mounting options:
- Four tapped holes for mounting standard
- Block front option
- Foot mount option
- Trunnion mount option
- Front pivot or clevis mount rod end kits
- Rear pivot or clevis available with reverse parallel motor mount option
- Extra rod extension
- Female thread rod end optional (male standard)

Motor options:
- Offset reverse parallel motor mounts (to conserve space)
- No motor
- AC or DC motor and encoder
- AC or DC motor and drive
- AC or DC motor, encoder, and drive
- IntelliMotor®

Performance options:
- Brake option (with motor) – longer lead times may apply. Compatible brakes are specified.
- Self-locking threads (selected models)
- Switches – band or track mounting

Specials:
- Low backlash designs
- Washdown motors

MATERIALS OF CONSTRUCTION

Piston:	6061-T6511 Aluminum
Square Rod:	304 Stainless Steel
Motor Mount:	2024-T350 Aluminum
Angular Bearing:	52100 Steel
Rod End:	303 Stainless Steel
Drive Nut:	Acetal
Coupler:	17-4 Ph Stainless Steel
Fasteners:	Alloy Steel and Stainless Steel
Washdown Cap:	6061-T6511 Aluminum
O-Rings:	Buna-Nitrile
Wear Ring:	Glass-filled Teflon
Rod Bearing:	SAE 660 Bronze
Drive Screw:	303 Stainless Steel
Fasteners:	18-8 Stainless Steel
Retaining Rings:	Stainless Steel, Phosphate Covered Spring Steel
Pulleys:	Anodized Aluminum
Belt:	Nylon Covered, Fiberglass Reinforced Neoprene
Mounting Brackets:	304 Stainless Steel
Trunnion Pins:	303 Stainless Steel
R, Q, S Cap:	CF8 Cast Stainless Steel
Switch Track:	6063-T6 Aluminum
MF Plates:	2024 or 6061-T6 Aluminum

DEFINITIONS

Thrust: Output force of the actuator
Load: Total of all forces opposing the actuator
Repeatability: Window within which the actuator can reposition itself
Backlash: Amount of travel for the actuator with the screw held fixed (measured at the rod end)
Accuracy: Amount of error possible in linear position on screw thread
Lead: The linear distance moved for one turn of the screw
Static Load: Force required to move the mass at a constant speed
Dynamic Load: Force required to accelerate the mass
Friction Load: Force opposing motion of the mass due to surface contact
External Load: All forces not accounted for above
Weight: The force of the mass due to Earth's gravity
Stroke: The distance the mass is moved

HOW IT'S USED

APPLICATION IDEAS

- Pick & Place
- Sorting
- Gating
- Loading
- Lifting
- Stacking
- Insertion
- Dispensing
- Clamping
- Parts Transfer
- Valve Control

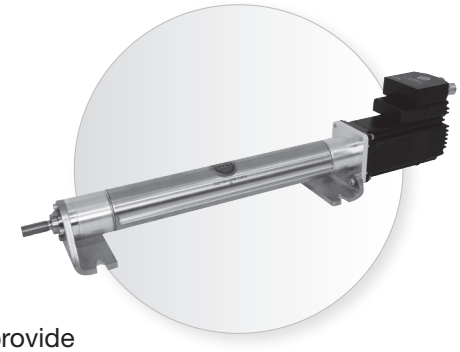

TARGET APPLICATIONS

Bimba's Original Line Electric® (OLE) Actuators are designed, built, and tested to provide the longest life, greatest durability, highest speed, and greatest thrust per dollar. They are ideal for applications requiring greater control for enhanced flexibility. OLE actuators can adapt to applications that utilize our Original Line® (OL) pneumatic cylinders, and are available without motors (sized for steppers or servos), with integral DC stepper motors, AC stepper motors, integrated motors, and with matching AC and DC drives.

The OLE is entry-level rod-style actuator that can be used in applications where relatively small or mid-range loads are guided and required to be moved between 0.01" and 18" of stroke. Using an ACME nut construction and the same stainless steel body as found in our Original Line® pneumatic actuator, the Bimba OLE is a solid actuator with a form and fit that closely emulates the OL. This familiar look, ubiquitous in the fluid power industry, is now easily identifiable as a Bimba OLE.

Taking advantage of Bimba scales of economies along with a lighter duty ACME nut construction, customers have a low-cost, high-quality electric motion solution that not only fits the project budget but, more importantly, fits the project scope.

DRIVE OPTIONS

OLE actuators offer two drive interfaces to choose from: a single standard inline shaft input or a reverse parallel drive. With many Bimba stepper and servo motors available, configuring an electric actuator that best meets the needs of your application has never been easier. If you prefer, you can use your own motor. Bimba likely has a motor mount configuration that will fit; if not, we can design a custom motor mount that fits your unique motor.

ADVANTAGES

FEATURE	ADVANTAGE	BENEFIT
ACME short lead	Low cost	Provides addorable electric actuator with great capability
ACME short lead	Holds verstical loads during power loss	No need for brake; minimizes damage to equipment
Uses stepper or servo motors	Matches correct technology to the application	Receives ideal solutions
IP66 types available	Can be used in washdown applications	Allows use in harsh envrionments

SPECIFICATIONS AND SIZING

No Motor Option (N)

BASE PART NUMBER	LEAD[2] (in)	BACKLASH[3] (in)	SCREW ACCURACY (in/in)	SCREW REPEATABILITY (µ in)	MAXIMUM LOAD (lbs.)	BASE ACTUATOR INERTIA (oz-in^2)	ACTUATOR INERTIA PER INCH (oz-in^2)[4]
OLE-75-xx-12xx-Nx1	.125	.003	0.0006	50	75	.003	.006
OLE-75-xx-50xx-Nx	.50	.005	0.0006	50	75	.003	.006
OLE-75-xx-75xxx-Nx	.75	.007	0.0006	50	75	.003	.006
OLE-150-xx-16xx-Nx1	.16	.005	0.0006	50	150	.218	.021
OLE-150-xx-25xx-Nx	.25	.006	0.0006	50	150	.218	.021
OLE-150-xx-50xx-Nx	.50	.008	0.0006	50	150	.218	.021
OLE-350-xx-20xx-Nx1	.20	.003	0.0006	50	350	1.588	.103
OLE-350-xx-50xx-Nx	.75	.005	0.0006	50	350	1.588	.103
OLE-350-xx-100xx-Nx	1.0	.007	0.0006	50	350	1.588	.103

Operating temperature range: -20° F to 160° F (-29° C to 71° C)
Standard IP rating: None
Maximum stroke: 18 inches
RoHS compliant

[1] Self-locking threads
[2] Inches per revolution of screw
[3] Amount of end play on screw. Low backlash designs are available. Contact Technical Support.
[4] Inertia is given per inch of stroke

Caution! When specifying actuator stroke before ordering, always add at least 1/8 inch to the full stroke required in your application. The actuator should not reach mechanical end of stroke during extend or retract. Repeatedly reaching mechanical end of stroke, especially under load at operating speeds, may damage the actuator.

SIZING YOUR ACTUATOR AND SPECIFYING THE RIGHT MOTOR

The following procedure is for sizing an actuator and arriving at a single-point speed/torque specification for a motor not supplied by Bimba. Speed and thrust performance of Bimba's standard motor and actuator combinations may not be equivalent.

1. Determine the thrust, maximum speed, and stroke your application requires. Overstating speed and thrust will make your actuator more expensive than it needs to be. Understating the speed and thrust will compromise performance and durability.
2. Use the "Speed versus Thrust" graph. Actuators' curves that are ABOVE your speed/thrust data point are usable. Curves below the data point are not.

   You have just identified the series of actuator (75, 150, or 350) that is best suited for your application.
3. Use the "Thrust versus Torque" graphs for the actuator series identified above. Select the lead (inches per turn of the screw) that will provide the thrust you require with the minimum motor torque.
4. Use the "Speed versus RPM" graphs for the actuator series and lead you selected. Find the motor speed in RPM required to provide the actuator speed (inches per second) using the chosen lead (inches per rev). You might need to evaluate several different OLE series or leads in order to identify an achievable speed/torque motor specification.

Speed Versus Thrust

75 Speed versus Thrust, No Motor

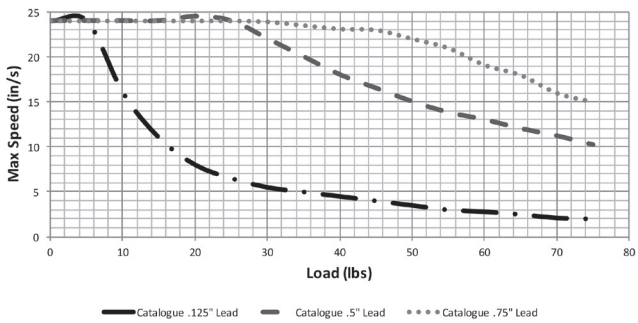

150 Speed versus Thrust, No Motor

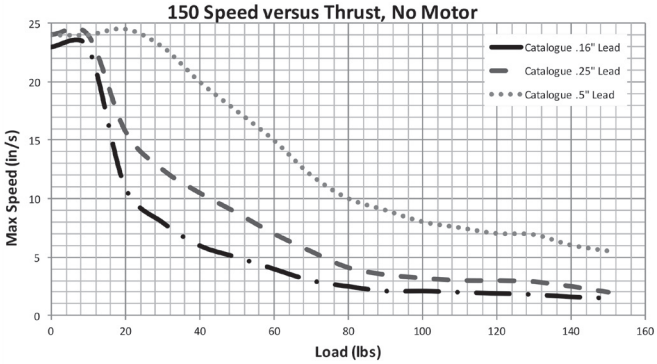

350 Speed versus Thrust

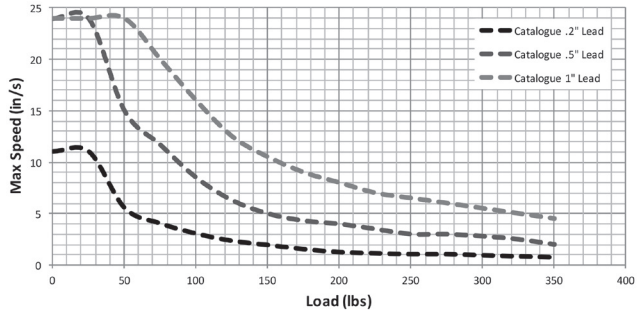

Thrust Versus Torque

OLE-75 Thrust versus Torque

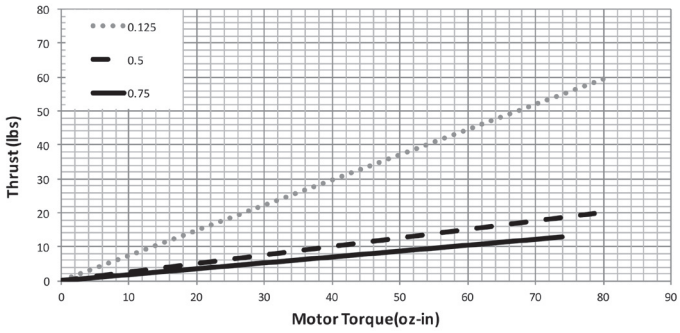

OLE-150 Thrust versus Torque

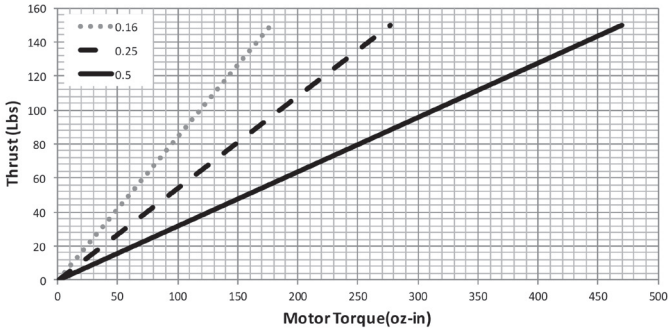

OLE-350 Thrust versus Torque

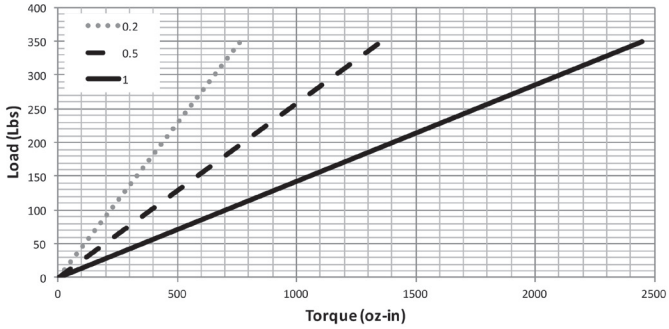

NOTE: The curves above are based on a number of design factors, including the PV limit of the nut and the maximum torque compatibility of the coupler. Other factors combine to limit speed. Do not exceed thrust/speed values shown in above graphs as damage to actuator may result.

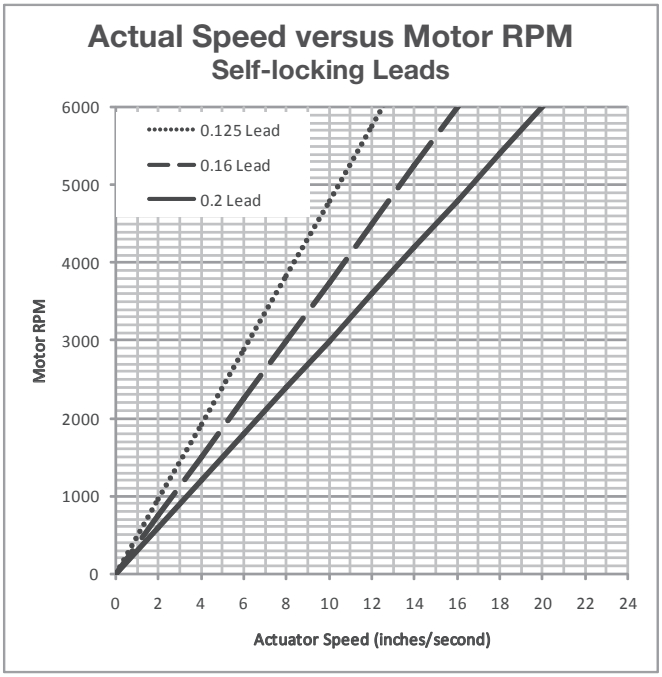
Actual Speed versus Motor RPM
Self-locking Leads
0.125 Lead
0.16 Lead
0.2 Lead
Motor RPM
6000
5000
4000
3000
2000
1000
0
0 2 4 6 8 10 12 14 16 18 20 22 24
Actuator Speed (inches/second)

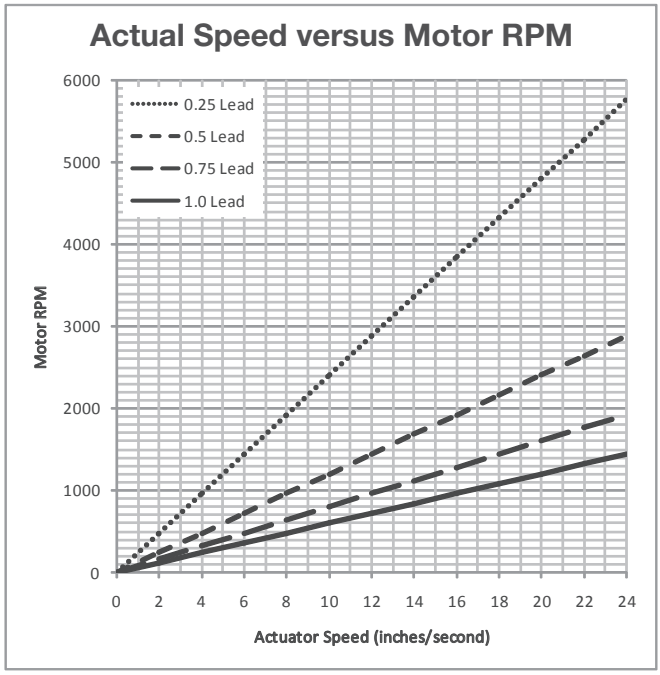
Actual Speed versus Motor RPM
0.25 Lead
0.5 Lead
0.75 Lead
1.0 Lead
Motor RPM
6000
5000
4000
3000
2000
1000
0
0 2 4 6 8 10 12 14 16 18 20 22 24
Actuator Speed (inches/second)

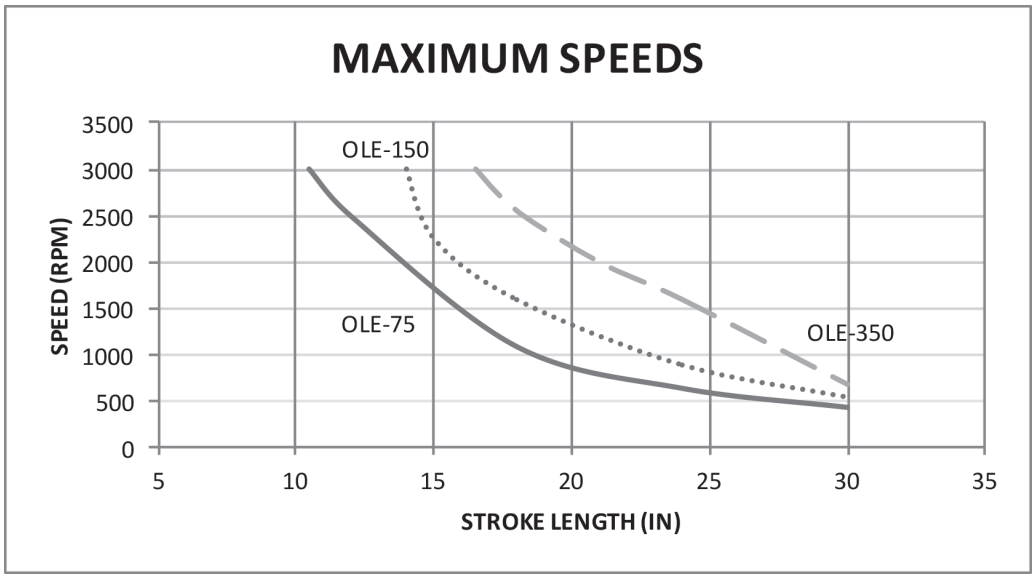
MAXIMUM SPEEDS
SPEED (RPM)
3500
3000
2500
2000
1500
1000
500
0
5 10 15 20 25 30 35
STROKE LENGTH (IN)
OLE-150
OLE-75
OLE-350

SPECIFICATIONS AND SIZING

Stepper Motor and Motor/Drive Options (P, E, Y, Z, S, A)

Actuator Specifications

BASE PART NUMBER	LEAD[2] (in)	BACKLASH[3] (in)	SCREW ACCURACY (in/in)	SCREW REPEATABILITY (μ in)	BASE ACTUATOR INERTIA (oz-in^2)	ACTUATOR INERTIA PER INCH (oz-in^2)[4]
OLE-75-xx-12xx-P1[1]	.125	.003	0.0006	50	.003	.006
OLE-75-xx-50xx-P1	.50	.005	0.0006	50	.003	.006
OLE-75-xx-75xxx-P1	.75	.007	0.0006	50	.003	.006
OLE-75-xx-12xx-xx[1]	.125	.003	0.0006	50	.003	.006
OLE-75-xx-50xx-xx	.50	.005	0.0006	50	.003	.006
OLE-75-xx-75xxx-xx	.75	.007	0.0006	50	.003	.006
OLE-150-xx-16xx-xx[1]	.16	.005	0.0006	50	.218	.021
OLE-150-xx-25xx-xx	.25	.006	0.0006	50	.218	.021
OLE-150-xx-50xx-xx	.50	.008	0.0006	50	.218	.021
OLE-350-xx-20xx-xx[1]	.20	.003	0.0006	50	1.588	.103
OLE-350-xx-50xx-xx	.50	.005	0.0006	50	1.588	.103
OLE-350-xx-100xx-xx	1.0	.007	0.0006	50	1.588	.103

Motor Specifications

BASE PART NUMBER	DC MOTOR INERTIA ADDER (P*, E*) (oz-in^2)[5]	DC MAXIMUM CURRENT DRAW[6]	INTELLIMOTOR® MOTOR INERTIA ADDER (S*) (oz-in^2)[5]	AC MAX CURRENT DRAW	INTELLIMOTOR® MAX CURRENT DRAW	AC MOTOR INERTIA ADDER (A*) (oz-in^2)[5]
OLE-75-xx-12xx-P1[1]	.44	1.7	--	--	--	--
OLE-75-xx-50xx-P1	.44	1.7	--	--	--	--
OLE-75-xx-75xxx-P1	.44	1.7	--	--	--	--
OLE-75-xx-12xx-xx[1]	1.42	4.24	1.42	1.41	5	1.64
OLE-75-xx-50xx-xx	1.42	4.24	1.42	1.41	5	1.64
OLE-75-xx-75xxx-xx	1.42	4.24	1.42	1.41	5	1.64
OLE-150-xx-16xx-xx[1]	2.51	4.24	2.52	1.41	5	2.63
OLE-150-xx-25xx-xx	2.51	4.24	2.52	1.41	5	2.63
OLE-150-xx-50xx-xx	2.51	4.24	2.52	1.41	5	2.63
OLE-350-xx-20xx-xx[1]	15.03	5.6	--	4.10	--	17.5
OLE-350-xx-50xx-xx	15.03	5.6	--	4.10	--	17.5
OLE-350-xx-100xx-xx	15.03	5.6	--	4.10	--	17.5

Operating temperature range: 32° F to 122° F (0° C to 50° C) limited by the drive.
If the drive is remotely mounted and protected from heat, maximum operating temperature will be 160° F (71° C).
Maximum stroke: 18 inches
RoHS compliant

[1] Self-locking threads
[2] Inches per revolution of screw
[3] Amount of end play on screw
[4] Inertia is given per inch of stroke
[5] Inertia for motor by itself
[6] For drive sizing for actuators supplied without drives

Caution! When specifying actuator stroke before ordering, always add at least 1/8 inch to the full stroke required in your application. The actuator should not reach mechanical end of stroke during extend or retract. Repeatedly reaching mechanical end of stroke, especially under load at operating speeds, may damage the actuator.

SPECIFICATIONS AND SIZING: DC STEPPER MOTORS

Speed/Thrust Performance
Vertical Orientation*, Pounds and Inches/Second
Maximum Continuous

Stepper Motor and Motor/Drive Options (P1, E1, Y1, Z1)

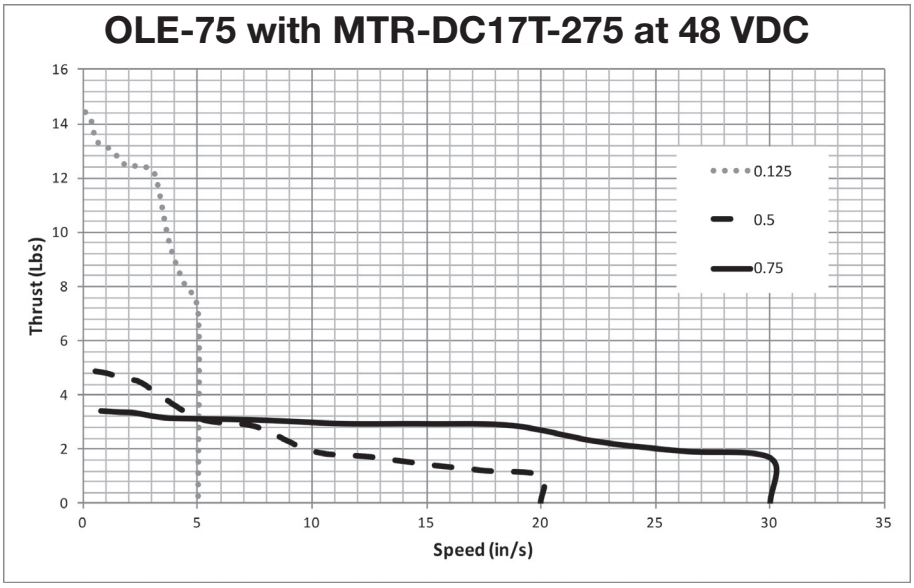

Stepper Motor Options (P2, P8, E2, E8)

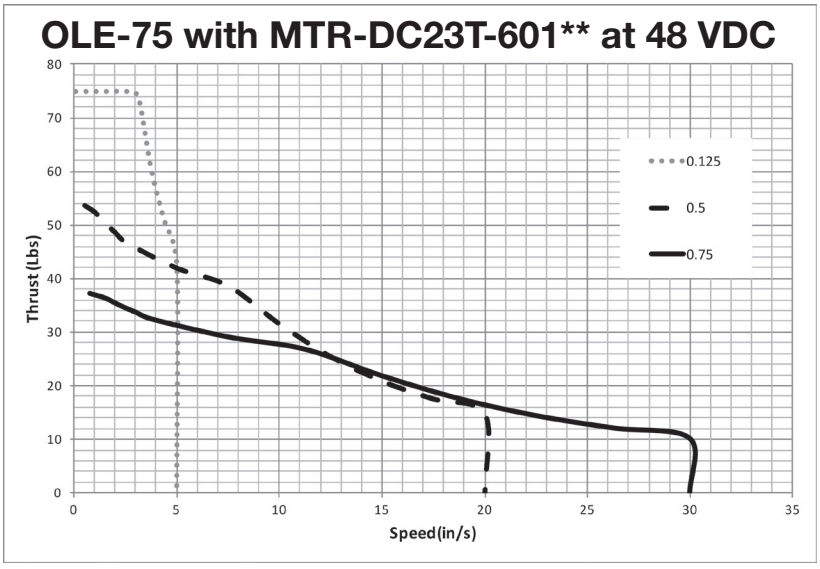

** Vertical orientation is worse-case. These values are thrust values and in a horizontal orientation will result in moving loads above the thrust values indicated in the graphs.*
*** Original OLE-75 with P2 motor performance graph.*

SPECIFICATIONS AND SIZING: DC STEPPER MOTORS

Speed/Thrust Performance
Vertical Orientation*, Pounds and Inches/Second
Maximum Continuous

Stepper Motor and Motor/Drive Options (P2, P8, E2, E8, Y2, Z2)

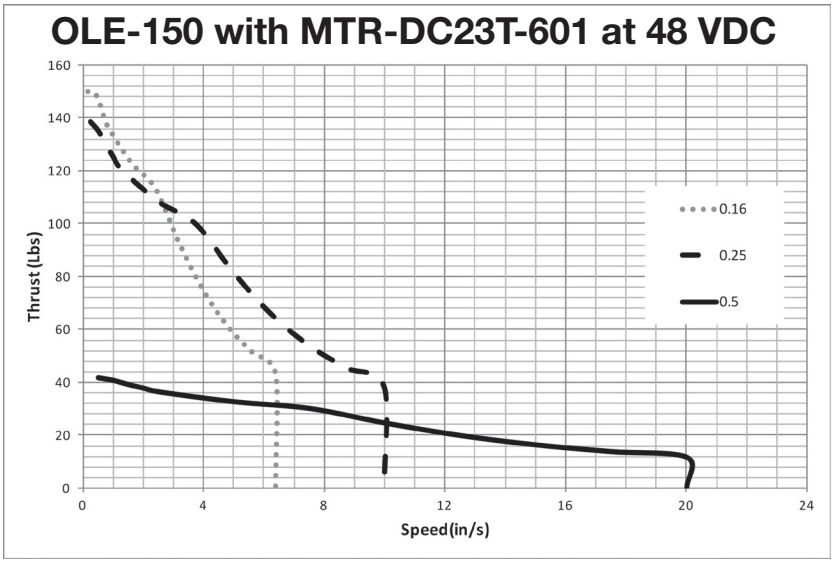

Stepper Motor and Motor/Drive Options (P3, P10, E3, E10, Y3, Z3)

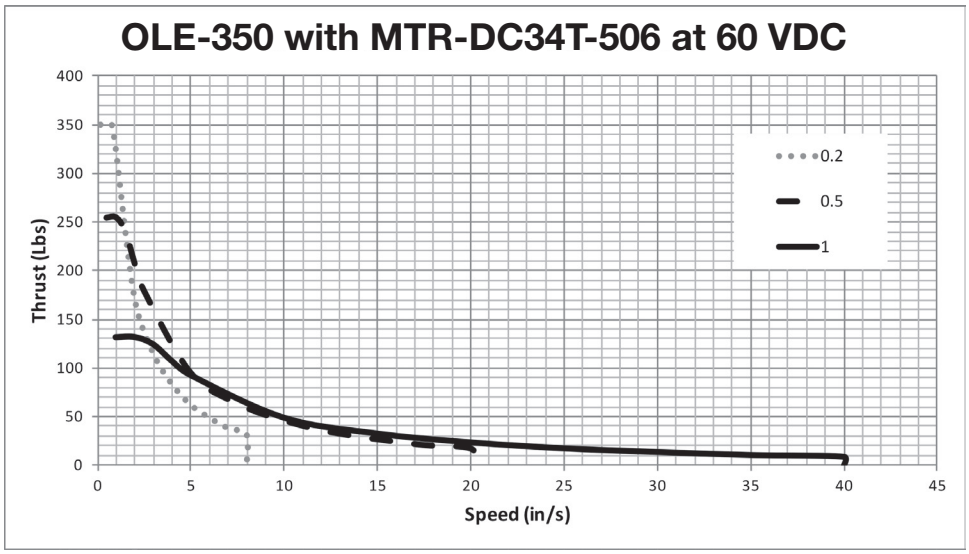

** Vertical orientation is worse-case. These values are thrust values and in a horizontal orientation will result in moving loads above the thrust values indicated in the graphs.*

SPECIFICATIONS AND SIZING: DC STEPPER MOTORS

OLE-75 with P2, P6, P7, E2, E6, E7 Motors

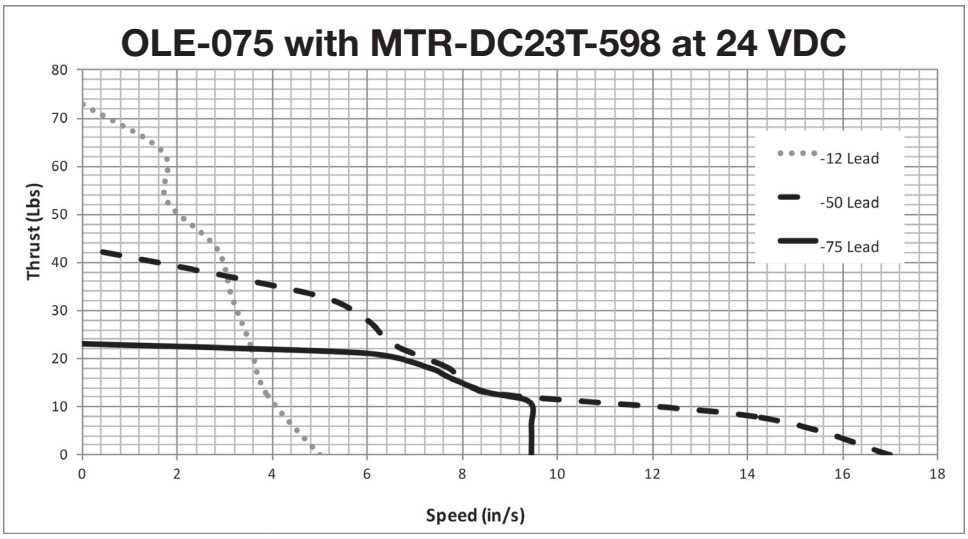

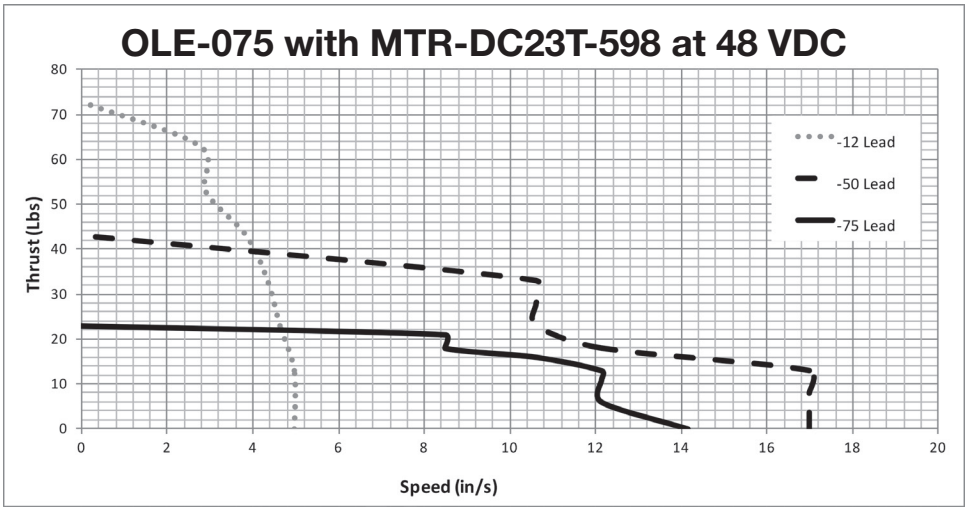

SPECIFICATIONS AND SIZING: DC INTELLIMOTOR®

ITM-23Q Thrust versus Speed Performance Curves
Vertical Orientation*, 5 amps Current, 4000 steps/rev.

OLE-75 with ITM-23Q-2-*-* at 24 VDC (S1, S3, S5, S7, S9, S11)

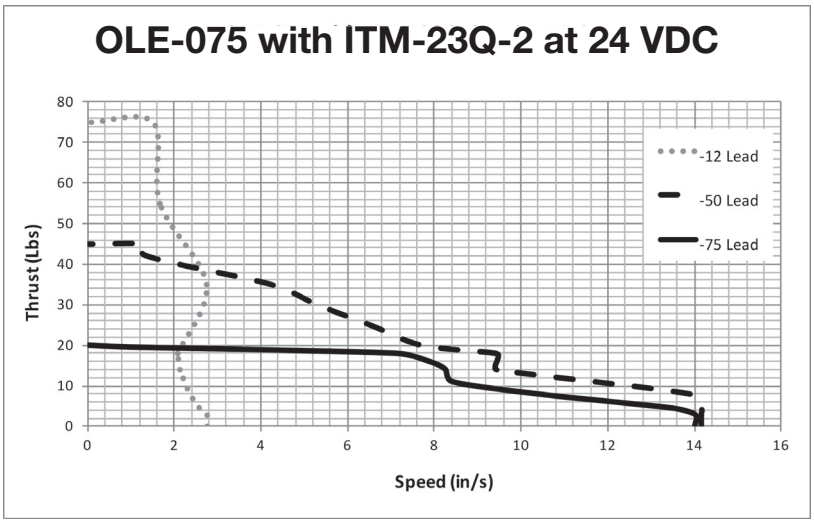

OLE-150 with ITM-23Q-3-*-* at 24 VDC (S2, S4, S6, S8, S10, S12)

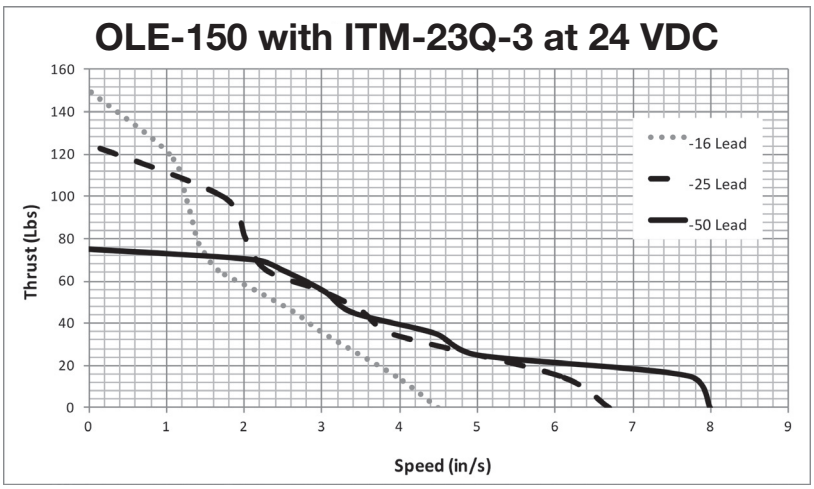

** Vertical orientation is worse-case. These values are thrust values and in a horizontal orientation will result in moving loads above the thrust values indicated in the graphs.*

SPECIFICATIONS AND SIZING: DC INTELLIMOTOR®

ITM-23Q Thrust versus Speed Performance Curves
Vertical Orientation*, 5 amps Current, 4000 steps/rev.

OLE-75 with ITM-23Q-2-*-* at 48 VDC (S1, S3, S5, S7, S9, S11)

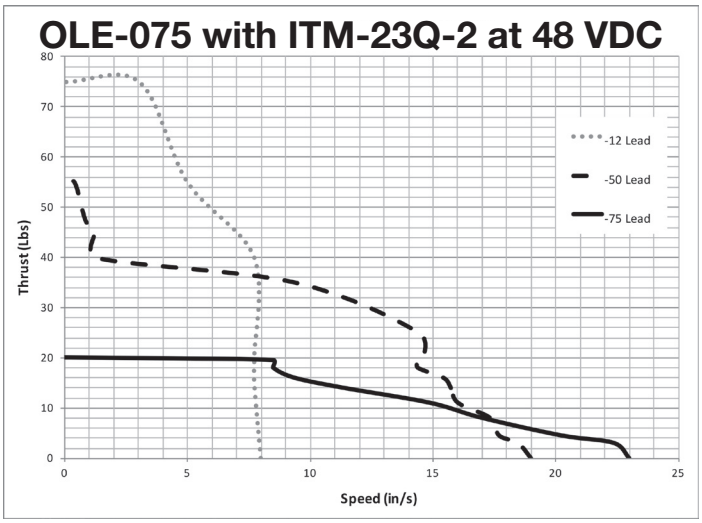

OLE-150 with ITM-23Q-3-*-* at 48 VDC (S2, S4, S6, S8, S10, S12)

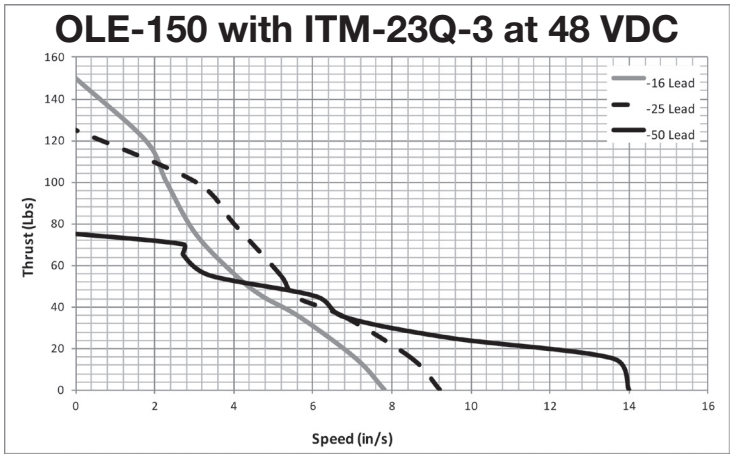

** Vertical orientation is worse-case. These values are thrust values and in a horizontal orientation will result in moving loads above the thrust values indicated in the graphs.*

SPECIFICATIONS AND SIZING: AC STEPPER MOTORS

Speed/Thrust Performance
Vertical Orientation, Pounds and Inches/Second
Maximum Continuous

Stepper Motor and Motor/Drive Options (A)

OLE-075 with MTR-AC23-753 at 120 VAC (A1, A2)

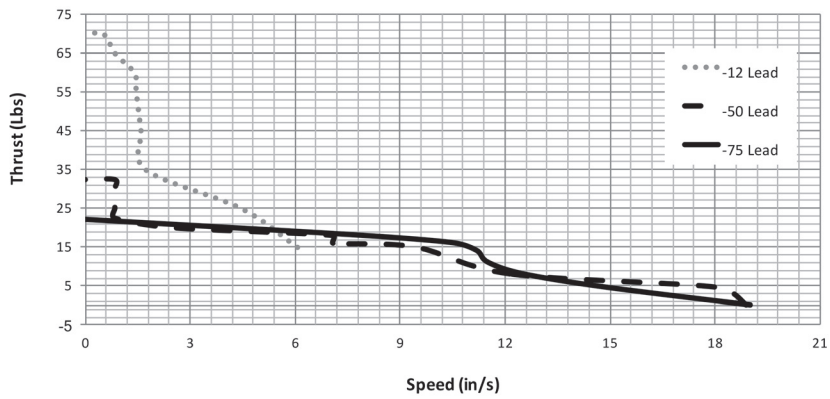

OLE-150 with MTR-AC23T-754 at 120 VAC (A5, A6)

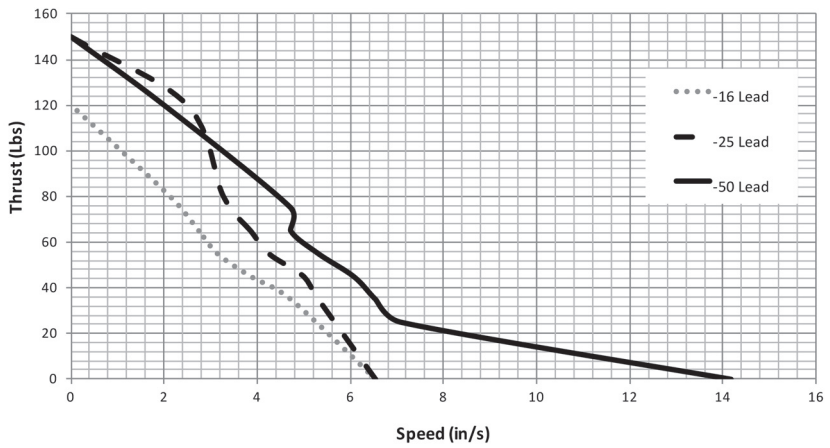

OLE-350 with MTR-AC34T-696 at 120 VAC (A9, A10)

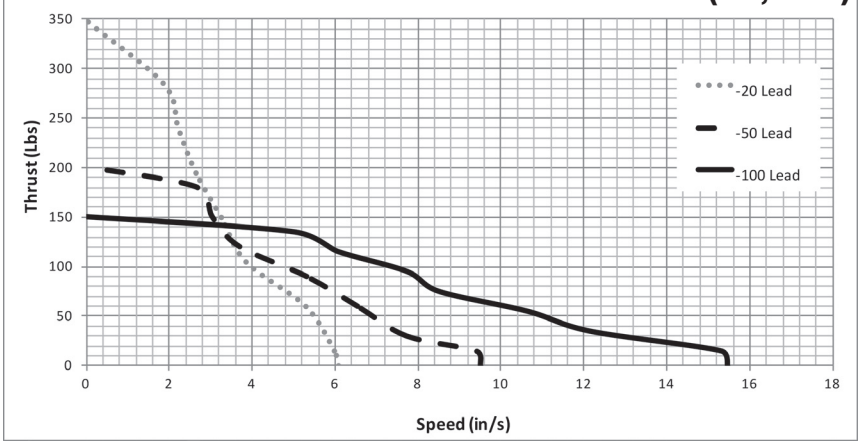

SPECIFICATIONS AND SIZING

Reverse Parallel Motor Options (R, S, Q & P, E, Y, Z)

Actuator Specifications

BASE PART NUMBER	LEAD[2] (in)	BACKLASH[3] (in)	SCREW ACCURACY (in/in)	SCREW REPEATABILITY (µ in)	BASE ACTUATOR INERTIA (oz-in²)[4]	ACTUATOR INERTIA PER INCH (oz-in²)[4]
OLE75-xx-12Rx-P1[1]	.125	.003	0.0006	50	.096	.006
OLE75-xx-50Rx-P1	.50	.005	0.0006	50	.096	.006
OLE75-xx-75Rx-P1	.75	.007	0.0006	50	.096	.006
OLE75-xx-12Rx-P2[1]	.125	.003	0.0006	50	.096	.006
OLE75-xx-50Rx-P2	.50	.005	0.0006	50	.096	.006
OLE75-xx-75Rx-P2	.75	.007	0.0006	50	.096	.006
OLE150-xx-16Rx-P2[1]	.16	.005	0.0006	50	1.01	.021
OLE150-xx-25Rx-P2	.25	.006	0.0006	50	1.01	.021
OLE150-xx-50Rx-P2	.50	.008	0.0006	50	1.01	.021
OLE350-xx-20Rx-P3[1]	.20	.003	0.0006	50	9.51	.103
OLE350-xx-50Rx-P3	.50	.005	0.0006	50	9.51	.103
OLE350-xx-100Rx-P3	1.0	.007	0.0006	50	9.51	.103

Motor Specifications

BASE PART NUMBER	DC MOTOR INERTIA ADDER (P*, E*) (oz-in²)[5]	DC MAXIMUM CURRENT DRAW[7]	INTELLIMOTOR® MOTOR INERTIA ADDER (S*) (oz-in²)[5]	AC MAX CURRENT DRAW	INTELLIMOTOR® MAX CURRENT DRAW	AC MOTOR INERTIA ADDER (A*) (oz-in²)[5]
OLE75-xx-12Rx-P1[1]	.44	1.7	--	--	--	--
OLE75-xx-50Rx-P1	.44	1.7	--	--	--	--
OLE75-xx-75Rx-P1	.44	1.7	--	--	--	--
OLE75-xx-12Rx-P2[1]	2.51	4.24	1.42	1.41	5	1.64
OLE75-xx-50Rx-P2	2.51	4.24	1.42	1.41	5	1.64
OLE75-xx-75Rx-P2	2.51	4.24	1.42	1.41	5	1.64
OLE150-xx-16Rx-P2[1]	2.51	4.24	2.52	1.41	5	2.63
OLE150-xx-25Rx-P2	2.51	4.24	2.52	1.41	5	2.63
OLE150-xx-50Rx-P2	2.51	4.24	2.52	1.41	5	2.63
OLE350-xx-20Rx-P3[1]	15.03	5.6	--	4.10	--	17.5
OLE350-xx-50Rx-P3	15.03	5.6	--	4.10	--	17.5
OLE350-xx-100Rx-P3	15.03	5.6	--	4.10	--	17.5

Operating temperature range: 32° F to 122° F (0° C to 50° C).
If the drive is remotely mounted and protected from heat, maximum operating temperature will be 158° F (70° C).
Maximum stroke: 18 inches
RoHS compliant

[1] Self-locking threads
[2] Inches per revolution of screw
[3] Amount of end play on screw
[4] Inertia for reverse parallel option
[5] Inertia is given per inch of stroke
[6] Inertia for motor by itself
[7] For drive sizing for actuators suppled without drives

NOTE: Performance ratings for all reverse parallel configurations with any motor combination are derated to 90% of the values shown in the previous graphs.

Caution! When specifying actuator stroke before ordering, always add at least 1/8 inch to the full stroke required in your application. The actuator should not reach mechanical end of stroke during extend or retract. Repeatedly reaching mechanical end of stroke, especially under load at operating speeds, may damage the actuator.

SPECIFICATIONS AND SIZING

Speed/Thrust Performance
Vertical Orientation*, Pounds and Inches/Second
Maximum Continuous

Reverse Parallel Motor Options (R, S, Q & P, E, Y, Z)

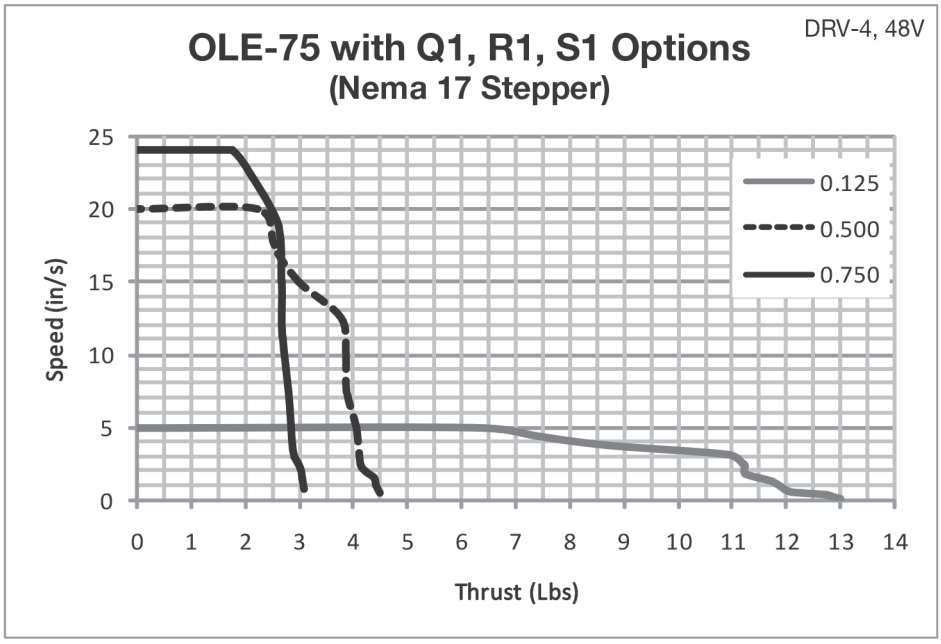

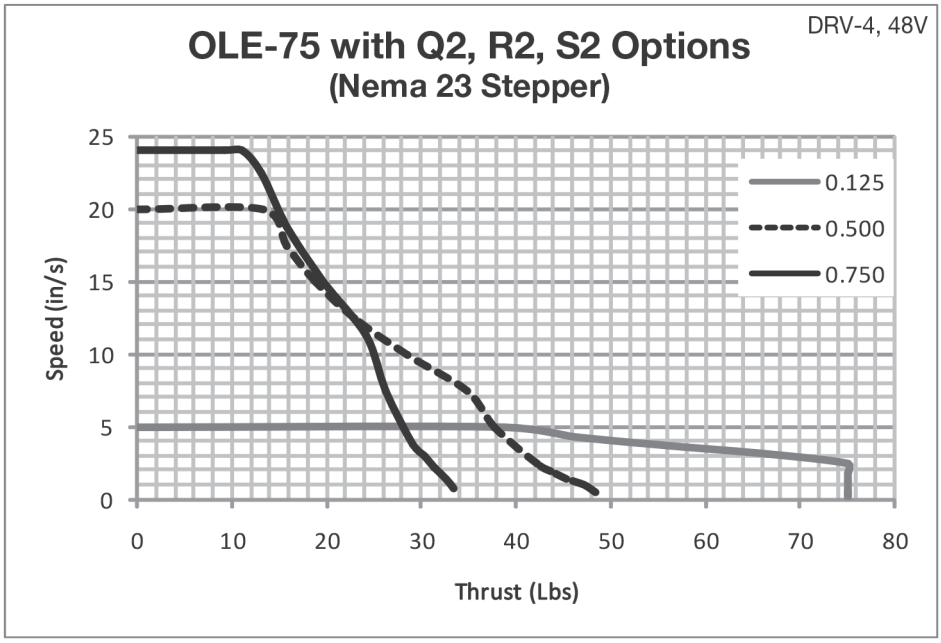

** Vertical orientation is worse-case. These values are thrust values and in a horizontal orientation will result in moving loads above the thrust values indicated in the graphs.*

SPECIFICATIONS AND SIZING

Speed/Thrust Performance
Vertical Orientation*, Pounds and Inches/Second
Maximum Continuous

Reverse Parallel Motor Options (R, S, Q & P, E, Y, Z)

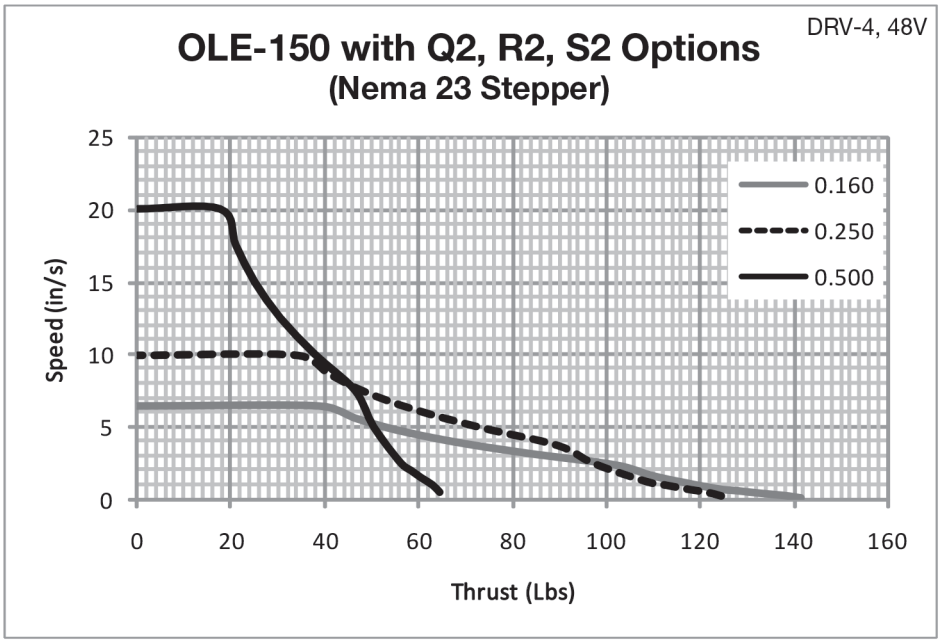

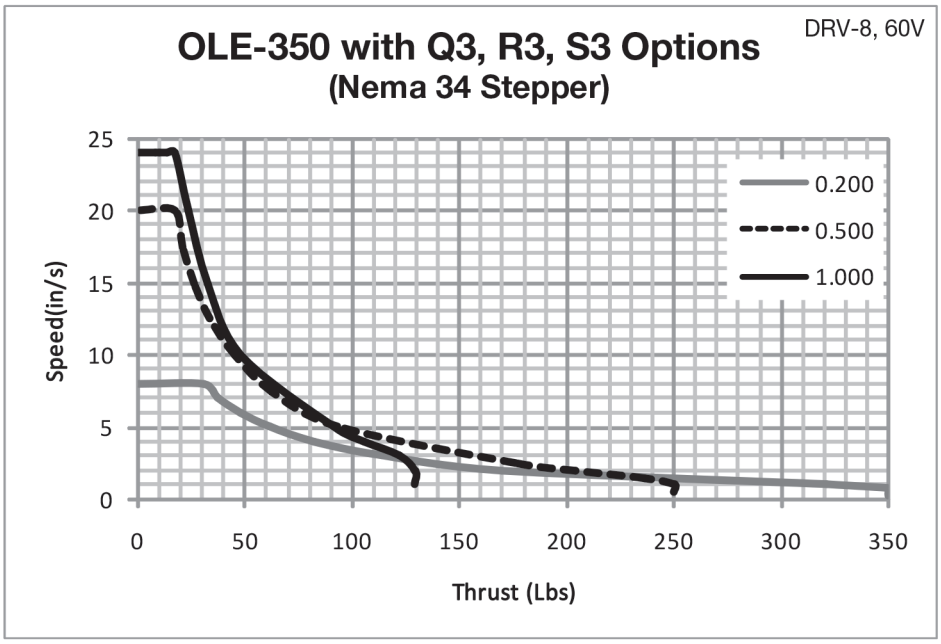

** Vertical orientation is worse-case. These values are thrust values and in a horizontal orientation will result in moving loads above the thrust values indicated in the graphs.*

DIMENSIONS

Brake (K Option)

Add motor and brake dimensions below to no motor actuator dimensions.

17 Frame Stepper and Brake (K1)

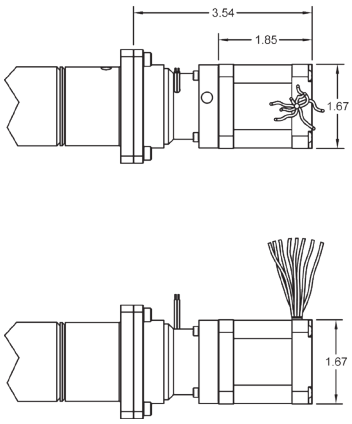

23 and 34 Frame Stepper and Brake (K2/K3)

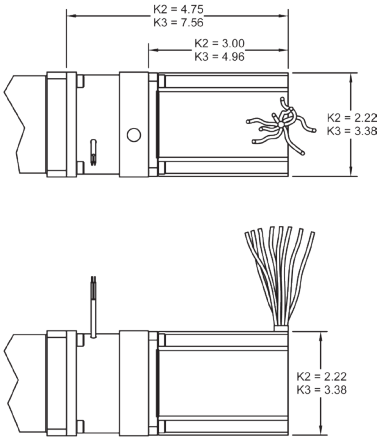

Switch Track (T1, T2, T3, T4 Options)

Numbers indicate the position of the switch track relative to the plug that provides access to the coupler.

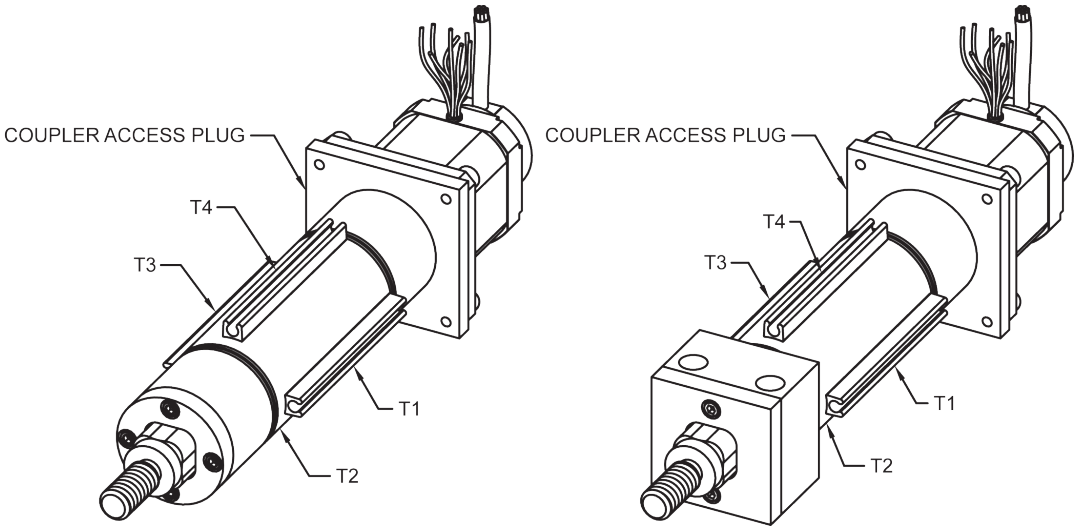

For use with Bimba MR, MS, MSC, or MSK track mount switches.

DIMENSIONS

Reverse Parallel Motor Mounting (R, S, and Q Options)

Add reverse parallel dimensions to no motor actuator dimensions.

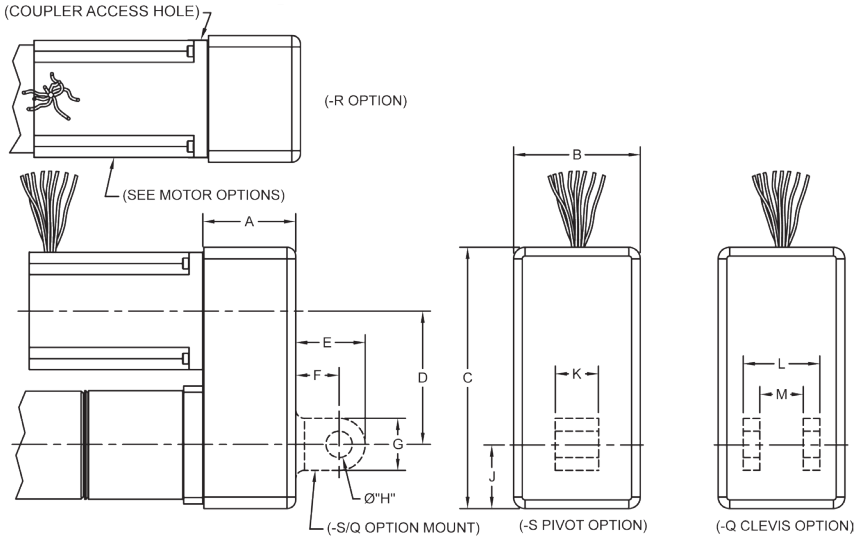

MOTOR	A	B	C	D	E	F	G	H	J	K	L	M
P1	1.50	2.61	4.60	1.99	1.25	0.75	1.00	0.50	1.31	0.75	1.75	0.76
P2	1.65	2.59	5.14	2.56	1.25	0.75	1.00	0.50	1.31	0.75	1.75	0.76
P3	2.65	3.65	7.52	3.86	2.00	1.25	1.50	0.75	1.85	1.25	2.50	1.26

DIMENSIONS

Mounting Options

Female Rod End (FT)

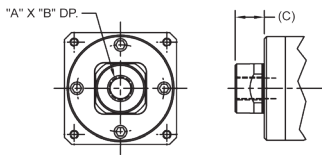

Block Front (BF) for 75, 150

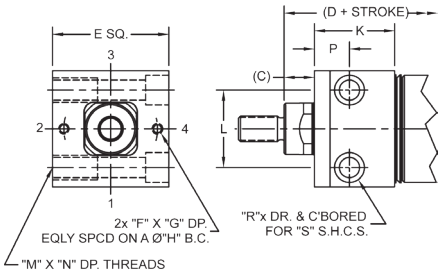

Trunnion Mount (T)

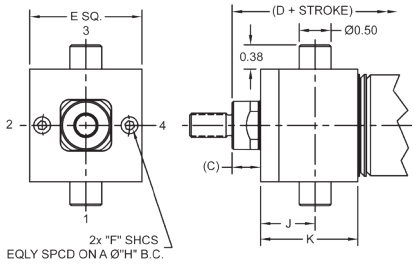

Block Front (BF) for 350

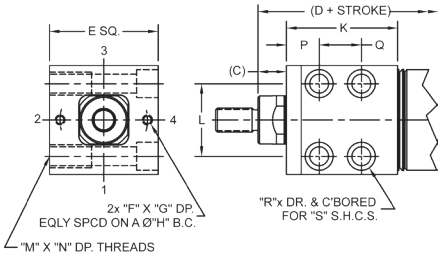

MODEL	A	B	C	D	E	F	G	H	J	K	L	M	N	P	Q	R	S
75	7/16-20 UNF	.75	0.58	5.75	1.75	#8-32 UNC	.30	1.25	0.67	1.34	1.13	5/16-18 UNC	0.63	0.813	N/A	2	#10
150	1/2-20 UNF	.65	0.59	7.84	2.25	#10-24 UNC	.38	1.75	1.00	2.00	1.50	7/16-20 UNF	0.63	1.25	N/A	2	3/8
350	3/4-16 UNF	.85	0.87	10.11	3.50	1/4-20 UNC	.50	2.50	1.25	2.50	2.63	9/16-18 UNF	1.13	0.72	0.86	4	1/2

Foot Mount

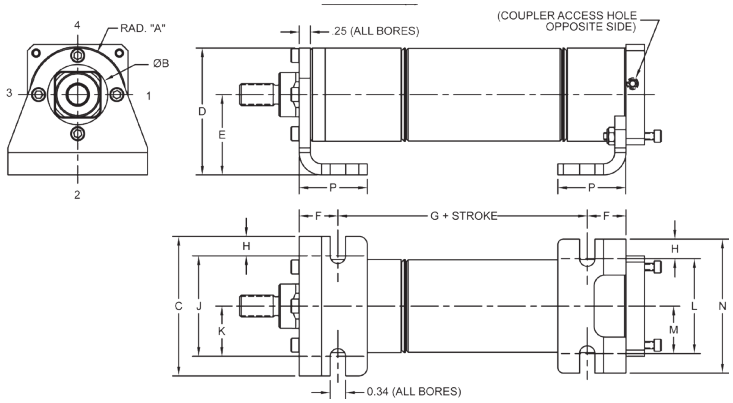

MODEL	A	B	C	D	E	F	G	H	J	K	L	M	N	P
75	0.78	1.00	2.75	2.40	1.63	0.94	3.29*	0.31	2.13	1.06	2.13	1.06	2.75	1.52
150	1.04	1.35	3.13	2.84	1.80	0.86	5.37*	0.44	2.25	1.13	2.13	1.06	3.01	1.52
350	1.56	2.00	4.38	3.61	2.05	1.06	6.82*	0.44	3.50	1.75	3.50	1.75	4.38	1.68

MOTOR COMPATIBILITY CHART

For selecting the right actuator with other brands of motors:

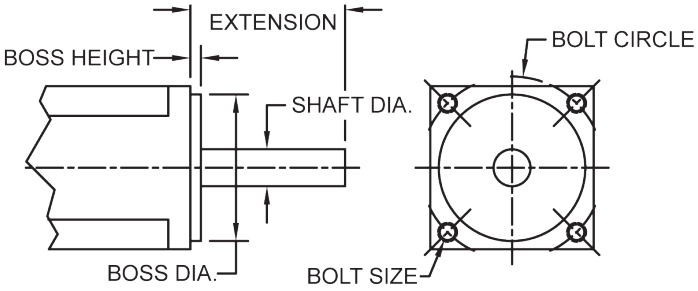

Stepper Motors

ORDERING INFORMATION					PERFORMANCE WITH 1/2 INCH LEAD		MOTOR PERFORMANCE	
STEPPER BRAND	STEPPER MODEL	MOTOR SIZE	ACTUATOR P/N	ADAPTER P/N	THRUST (lbs)	SPEED (in/sec)	MAX TORQUE (in-oz)	MAX SPEED (RPM)
Applied Motion	HT17-075	17	OLE-75x-(50)x-NA	D-109957	6	0.3	47	2400
Applied Motion	HT23-401	23	OLE-150x-(50)x-NC	None Required	135	0.5	210	2400
Applied Motion	HT34-478	34	OLE-350x-(50)x-NF	None Required	350	0.5	1284	2400
Lin	4118C-01	17	OLE-75x-(50)x-NA	D-109957	TBD	TBD	102.8	900
Lin	5718L-03P	23	OLE-150x-(50)x-NC	None Required	45	5	210	1200
Lin	8718L-08P	34	OLE-350x-(50)x-NF	None Required	185	2	1000	720
Sanyo Denki	103H5210-52	17	OLE-75x-(50)x-NA	D-109957	20	0.5	70	3000
Sanyo Denki	103H7128	23	OLE-150x-(50)x-NC	None Required	75	0.5	300	1583
Sanyo Denki	SM2863-522	34	OLE-350x-(50)x-NG	None Required	TBD	TBD	1100	2100

MOTOR MOUNTING DIMENSIONS										
STEPPER BRAND	STEPPER MODEL	MOTOR SIZE	ACTUATOR P/N	ADAPTER P/N	SHAFT DIAMETER (in)	SHAFT EXTENSION (in)	BOSS DIAMETER (in)	BOSS HEIGHT (in)	BOLT SIZE	BOLT CIRCLE
Applied Motion	HT17-075	17	OLE-75x-(50)x-NA	D-109957	5mm (.1968)	0.787	.865/.866	0.079	#4-40 Tapped	1.22 Sq
Applied Motion	HT23-401	23	OLE-150x-(50)x-NC	None Required	0.25	0.787	1.499/1.501	0.063	0.205	1.86 Sq
Applied Motion	HT34-478	34	OLE-350x-(50)x-NF	None Required	0.50	1.46	2.874/2.876	0.08	0.26	2.74 Sq
Lin	4118C-01	17	OLE-75x-(50)x-NA	D-109957	5mm (.1968)	0.94	0.864/0.866	0.08	M3 Tapped	1.22 Sq
Lin	5718	23	OLE-150x-(50)x-NC	None Required	0.25	0.81	1.499/1.501	0.06	0.2	1.86 Sq
Lin	8718	34	OLE-350x-(50)x-NF	None Required	0.50	1.46	2.874/2.876	0.08	0.26	2.74 Sq
Sanyo Denki	103H5210-52	17	OLE-75x-(50)x-NA	D-109957	5mm (.1968)	0.94	0.868/0.870	0.06	M3 Tapped	1.22 Sq
Sanyo Denki	103H7128	23	OLE-150x-(50)x-NC	None Required	0.25	0.81	1.499/1.501	0.06	.18/.2	1.86 Sq
Sanyo Denki	SM2863-522	34	OLE-350x-(50)x-NG	None Required	14mm (.551)	1.18	2.874/2.876	0.06	0.22	2.74 Sq

MOTOR COMPATIBILITY CHART

For selecting the right actuator with other brands of motors:

Servo Motors

ORDERING INFORMATION				PERFORMANCE WITH 1/2 INCH LEAD		MOTOR PERFORMANCE	
SERVO BRAND	SERVO MODEL	ACTUATOR P/N	ADAPTER P/N	THRUST (lbs)	SPEED (in/sec)	MAX TORQUE (in-oz)	MAX SPEED (RPM)
Allen Bradley	TLY-A130T-_AA	OLE-150x-(50)x-ND	D-109958	29	50	46	6000
Allen Bradley	TLY-A130T-_AN	OLE-75x-(50)x-NC	D-109968	29	50	46	6000
Allen Bradley	TLY-A230T-_AN	OLE-350x-(50)x-NE	D-109959	117	50	184	6000
Allen Bradley	TLY-A2540P	Special1	Special			416	5000
Lin	BL17B40	OLE-75x-(50)x-NA	D-109960	26	33	41	4000
Lin	BL24B46-01	OLE-150x-(50)x-NC	None Required	54	33	87.8	4000
Lin	BL25B19-01	OLE-150x-(50)x-NC	Special	21	33	34	4000
Mitsubishi	HC-KFS13	OLE-150x-(50)x-ND	D-109958	28	25	45	3000
Mitsubishi	HC-KFS43	OLE-350x-(50)x-NG	D-109959	114	25	184	3000
Mitsubishi	HC-KFS73	Special1	Special	221	25	340	3000
Mitsubishi	HC-MFS053(B)	OLE-150x-(50)x-ND	D-109958	27	25	22.6	3000
Mitsubishi	HC-MFS43(B)	OLE-350x-(50)x-NG	D-109959	155	25	184	3000
Mitsubishi	HC-MFS73	Special1	Special			339	3000
Panasonic	MSMD5A_1_	OLE-150x-(50)x-ND	D-111352	14	42	68	5000
Panasonic	MSMD01_1_	OLE-150x-(50)x-ND	D-111352	28	42	136	5000
Panasonic	MSMD021_1_	OLE-350x-(50)x-NH	D-111353	52	42	272	5000
Panasonic	MSMD041_1_	OLE-350x-(50)x-NG	D-111353	105	42	552	5000
Sanyo Denki	Q1AA06040D	OLE-350x-(50)x-NG	D-109959	111	25	180	3000
Sanyo Denki	Q2EA04010D	OLE-150x-(50)x-NB	D-109958	28	25	45	3000
Sanyo Denki	Q2AA08100D	Special1	Special	293	25	450	3000
Yaskawa	SGMJV-01A	OLE-150x-(50)x-ND	D-109958	28	25	67.5	3000
Yaskawa	SGMJV-04A	OLE-350x-(50)x-NG	D-109959	111	25	247	3000

MOTOR MOUNTING DIMENSIONS									
SERVO BRAND	SERVO MODEL	ACTUATOR P/N	ADAPTER P/N	SHAFT DIAMETER (in)	SHAFT EXTENSION (in)	BOSS DIAMETER (in)	BOSS HEIGHT (in)	BOLT SIZE	BOLT CIRCLE
Allen Bradley	TLY-A130T-_AA	OLE-150x-(50)x-ND	D-109958	8mm	0.98	1.180/1.181	0.1	0.177	1.811
Allen Bradley	TLY-A130T-_AN	OLE-75x-(50)x-NC	D-109968	0.25	1.063	0.866	0.08	8-32 Tapped	1.725
Allen Bradley	TLY-A230T-_AN	OLE-350x-(50)x-NE	D-109959	12mm	1.181	1.967/1.968	0.12	0.26	2.76
Allen Bradley	TLY-A2540P	Special1	Special	16mm(.630)	1.378	2.754/2.755	0.12	0.26	3.94
Lin	BL17B40	OLE-75x-(50)x-NA	D-109960	5mm	0.83	0.988	0.12	M4	1.00 Sq
Lin	BL24B46-01	OLE-150x-(50)x-NC	None Required	0.25	0.81	1.499/1.500	0.06	0.2	1.86 Sq
Lin	BL25B19-01	OLE-150x-(50)x-NC	Special	0.25	0.81	2.124/2.128	0.06	0.2	1.95 Sq
Mitsubishi	HC-KFS13	OLE-150x-(50)x-ND	D-109958	8mm	0.98	1.180/1.181	0.098	0.177	1.811
Mitsubishi	HC-KFS43	OLE-350x-(50)x-NG	D-109959	14mm(.551)	1.181	1.967/1.968	0.118	0.228	2.755
Mitsubishi	HC-KFS73	Special1	Special	19mm(.748)	1.575	2.755/2.756	0.118	0.26	3.543
Mitsubishi	HC-MFS053(B)	OLE-150x-(50)x-ND	D-109958	8mm	0.94	1.181	0.098	0.177	1.811
Mitsubishi	HC-MFS43(B)	OLE-350x-(50)x-NG	D-109959	14mm(.551)	1.181	1.967/1.968	0.118	0.228	2.756
Mitsubishi	HC-MFS73	Special1	Special	19mm(.748)	1.574	2.754/2.755	0.118	0.26	3.543
Panasonic	MSMD5A_1_	OLE-150x-(50)x-ND	D-111352	8 mm	30 mm	1.811	0.12	0.13	1.181
Panasonic	MSMD01_1_	OLE-150x-(50)x-ND	D-111352	8 mm	30 mm	1.811	0.12	0.13	1.181
Panasonic	MSMD021_1_	OLE-350x-(50)x-NH	D-111353	11 mm	50 mm	1.969	0.12	0.18	2.756
Panasonic	MSMD041_1_	OLE-350x-(50)x-NG	D-111353	14 mm	50 mm	1.969	0.12	0.18	2.756
Sanyo Denki	Q1AA06040D	OLE-350x-(50)x-NG	D-109959	14mm(.551)	1.181	1.967/1.968	0.118	0.216	2.755
Sanyo Denki	Q2EA04010D	OLE-150x-(50)x-NB	D-109958	6mm	0.98	1.180/1.181	0.098	0.177	1.811
Sanyo Denki	Q2AA08100D	Special1	Special	16mm(.630)	1.378	3.148/3.150	0.118	0.26	3.937
Yaskawa	SGMJV-01A	OLE-150x-(50)x-ND	D-109958	8mm	0.984	1.181	0.098	0.169	1.811
Yaskawa	SGMJV-04A	OLE-350x-(50)x-NG	D-109959	14mm(.551)	1.181	1.967/1.968	0.118	0.216	2.756

ACCESSORIES

Rod Clevis

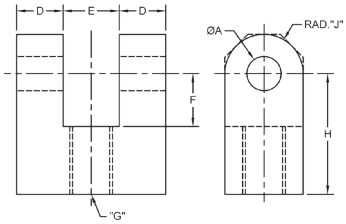

MODEL	PART NO.	A	D	E	F	G	H	J
75	RS-RC437	0.50	0.50	0.75	0.75	7/16-20	1.50	0.50
150	RS-RC500					1/2-20		
350	RS-RC750	0.75	0.63	1.25	1.25	3/4-16	2.38	0.75

Clevis Pin

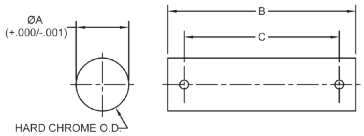

MODEL	PART NO.	A	B	C
75, 150	RS-CP500	0.50	2.25	1.94
350	RS-CP750	0.75	3.00	2.72

(Clevis pins sold with (2) S.S. cottter pins)

Mating Pivot Bracket

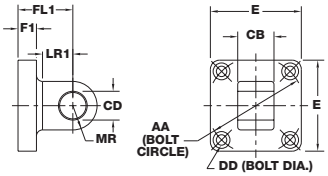

MODEL	PART NO.	AA	CB	CD	DD	E	F1	FL1	LR1	MR
75, 150	APB-1	2.00	0.75	0.50	0.19	1.88	0.38	1.12	0.745	0.50
350	APB-2	2.83	1.25	0.75	0.312	2.75	0.50	1.88	1.10	0.69

Rod Eye

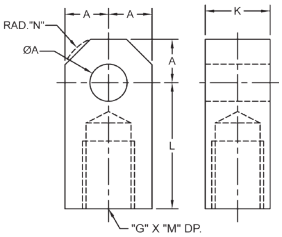

MODEL	PART NO.	A	K	L	G	M	N
75	RS-RE437	0.50	0.75	1.50	7/16-20	0.75	0.63
150	RS-RE500				1/2-20		
350	RS-RE750	0.75	1.25	2.06	3/4-16	1.13	0.88

Mating Clevis Bracket*

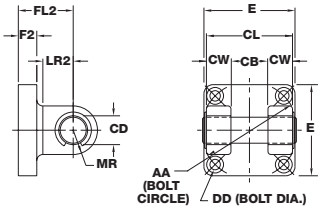

MODEL	PART NO.	AA	CB	CD	CL	CW	DD	E	F2	FL2	LR2	MR
75, 150	ACB-1	2.00	0.75	0.50	1.75	0.50	0.19	1.88	0.38	1.12	0.745	0.50
350	ACB-2	2.83	1.25	0.75	2.50	0.62	0.312	2.75	0.38	1.25	0.85	0.69

**Includes case hardened pin*

ACCESSORIES

Adapter Plates

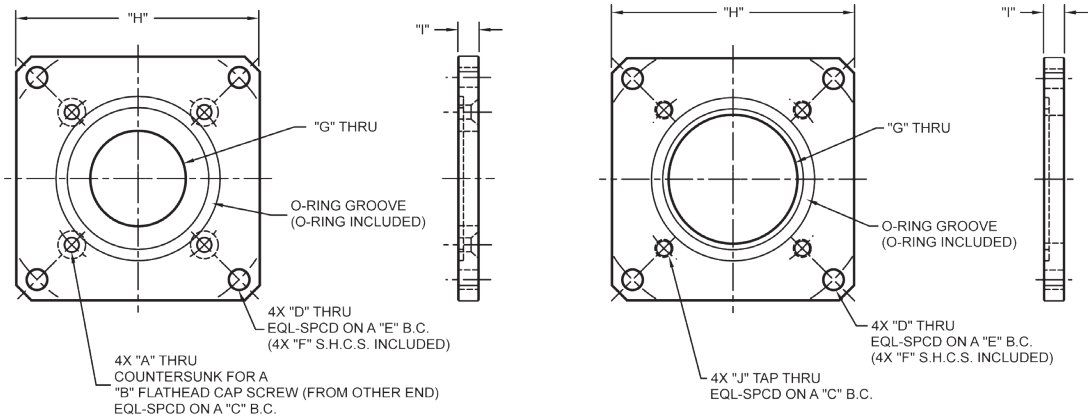

PART NO.	A	B	C	D	E	F	G	H	I	J
D-109957	.13	#4	1.73	.18	2.63	#8	.87	2.25 SQ.	.20	N/A
D-109958	N/A	N/A	1.81	.18	2.63	#8	1.18	2.25 SQ.	.20	#8-32 UNC-2B
D-109959	N/A	N/A	2.76	.20	3.87	#10	1.97	3.39 SQ.	.30	#10-24 UNC-2B
D-109960	.17	#8	1.41	.18	2.63	#8	.99	2.25 SQ.	.20	N/A
D-109968	.18	#8	1.73	.18	2.63	#8	.87	2.25 SQ.	.20	N/A
D-111352	N/A	N/A	1.77	.18	2.63	#8	1.18	2.25 SQ.	.20	M3
D-111353	N/A	N/A	2.76	.20	3.87	#10	1.97	3.39 SQ.	.30	#8-32 UNC-2B

MF1 Mounting Plate

(Allows OLE to front mount to standard NFPA MF1 dimensions.)

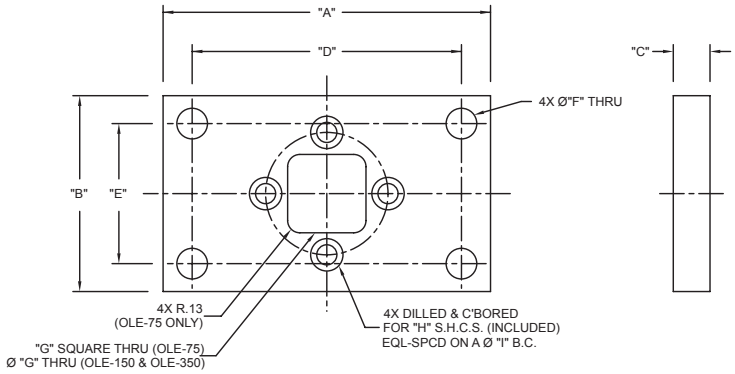

PART NO.	MODEL	A	B	C	D	E	F	G	H	I
MFEA-75	75	3.34	2.00	0.38	2.75	1.43	0.31	0.80	#8	1.25
MFEA-150	150	4.09	2.50	0.38	3.38	1.84	0.38	1.35	#10	1.75
MFEA-350	350	5.47	3.75	0.63	4.69	2.76	0.44	2.00	1/4	2.50

HOW TO ORDER

The model number of all Original Line Electric® Actuators consists of alphanumeric clusters designating product type, body size (number designates maximum thrust capacity in pounds), stroke length, lead, mounting style, motor type and configuration, and options. The example below describes OLE-7512.12-50BF-T1Y2, a 75 pound maximum thrust model with 1.5 inch diameter body, 12.12 inch stroke, 0.50 inch lead, block front mount, switch track, 23 frame stepper motor with encoder, and drive. Piston magnets are included.

MODEL
OLE

BODY SIZE	
75	75 lbs. thrust - 1.5" dia.
150	150 lbs. thrust - 2" dia.
350	350 lbs. thrust - 3" dia.

STROKE LENGTHS
1 - 18 inches continuous (speed limited)

MOUNTING	
Blank	Tapped Holes
BF	Block Front
FM	Foot Mount
Q	Reverse Parallel Motor Mount with Rear Clevis
R	Reverse Parallel Motor Mount
S	Reverse Parallel Motor Mount with Rear Pivot
T	Trunnion Mount
	Front Clevis[2]
	Front Pivot[2]

[2] For front clevis or pivot mounting, order kits in accessories section.

OLE - 75 12.12 - 50 BF - T1Y2

LEAD (inches per turn of screw)			
MODEL	LEADS		
75	12[1]	50	75
150	16[1]	25	50
350	20[1]	50	100

LEAD	VALUE (in)
12	.125 [1]
16	.16 [1]
20	.20 [1]
25	.25
50	.50
75	.75
100	1.0

[1] Self locking threads. Back-drive thrust limit exceeds that of the actuator.

OPTIONS	
FT	Female Rod Threads
T	Switch Track (T1, T2, T3, T4 specify track position on body)
EE	Extra Rod Extension (x.xx inches)

Brakes	
Motor Size Compatibility	Brake Option
NEMA 17, P1, E1, Y1, Z1	K1[3]
NEMA 23, P2, E2, Y2, Z2	K2[3]
NEMA 34, P3, E3, Y3, Z3	K3[3]

[3] Longer lead times may apply for brake option. Contact Bimba Technical Support for details.

Coupler	Motor Shaft Diameter
A	5 mm
B	6 mm
C	0.25 inch
D	8 mm
E	12 mm
F	0.50 inch
G	14 mm
H	11 mm

Motors and Drives (pick only one option)			
	75	150	350
No motor (second digit defines coupler)	NA[4], NB[4], NC[4]	NB, NC, ND	NE, NF, NG
DC Stepper	P1, P2, P6	P2, P8	P3, P10
DC Stepper and Encoder	E1, E2, E6	E2, E8	E3, E10
DC Stepper and Drive[5 6]	Y1, Y2	Y2	Y3
DC Stepper, Encoder, and Drive[5 6]	Z1, Z2	Z2	Z3
AC Stepper[6]	A1	A5	A9
Integrated Stepper IntelliMotor®	S1, S3, S5, S7, S9, S11	S2, S4, S6, S8, S10, S12	--
AC Stepper and Encoder[6]	A2	A6	A10

[4] Adapter D-109957 is required for mounting 17 frame steppers.
[5] Non-Programmable step/direction drive.
[6] For AC and DC Intelligent Programmable drives, see page 8

INCOMPATIBLE OPTIONS

The following options cannot be ordered together.

MODEL	BF	FM	T*	R	S	Q	COUPLERS	MOTORS	MOTOR AND ENCODER	MOTOR AND DRIVE	MOTOR, ENCODER, AND DRIVE
75	FM, T*	BF, T*	FM, BF	N, S, Q	N, R, Q	N, R, S	D, E, F, G	P3, P8, P9, P10, P11, P12	E3, A5, A6, A7, A8, A9, A10, A11, A12, E3, E8, E9, E10, E11, E12	Y3	Z3, S2, S4, S6, S8, S10, S12
150	FM, T*	BF, T*	FM, BF	N, S, Q	N, R, Q	N, R, S	A, E, F, G	P1, P3, P4, P6, P7, P10, P11	E1, E3, E4, E6, E7, E10, E11, S1, S3, S5, S7, S9, S11, A1, A2, A3, A4, A9, A10, A11, A12	Y1, Y3	Z1, Z3, S1, S3, S5, S7, S9, S11
350	FM, T*	BF, T*	FM, BF	N, S, Q	N, R, Q	N, R, S	A, B, C, D	P1, P2, P4, P6, P7, P8, P9, A1, A2, A3, A4, A5, A6, A7, A8	E1, E2, E3, E4, E6, E7, E8, E9, A2, A4, A6, A8	Y1, Y2	Z1, Z2, S1, S2, S3, S4, S5, S6, S7, S8, S9, S10, S11

Refer to the "Motors and Drives" section for a complete list of all available Bimba motors and drives.

Some of the options that can be uniquely added to an OLE actuator as a Bimba "special" or customization are shown below. Please contact your Bimba Customer Service representative at (800) 442-4622 (800.44.BIMBA) or email cs@bimba.com for additional details and information.

NOTE: Not all customatizations are available for every type. Contact Bimba Customer Service for details.

COMMON CUSTOMIZATIONS

- Stainless Steel
- IP65 or IP66 Washdown
- Specialized motor mount adaptors
- Brakes
- Low backlash designs
- Special motors
- RoHS compliant
- Alternative Leads
- Unique mounting
- Rod end plates
- Brass nuts
- Servo motors
- Special Mounting options

NOTES